PREMIER INDUSTRIES

PRESSURE REGULATORS, VALVES,
AND GAS DELIVERY SYSTEMS

JANUARY, 2021 EDITION

PREMIER INDUSTRIES

AMERICAN MADE.
INNOVATIVE.
RELIABLE.
ECONOMICAL.
PREMIER.

A PREMIER INDUSTRIES PUBLICATION

Copyright © 2021 Premier Industries
All rights reserved.
Printed in the USA

TABLE OF CONTENTS

Our Story 04

Things to Consider When Selecting a Regulator 05

Quick Look - Regulator Overview 06

Pressure Reducing Regulators 34

Back Pressure Regulators 266

Vacuum Actuated, Demand Flow Regulators 310

Manifolds & Changeovers. 323

Valves. 339

Accessories 368

OUR STORY

Premier Industries was established in 1995 as a designer and manufacturer of proprietary specialty gas and hydraulic regulators, valves, and systems, which now service a diverse market worldwide. We offer a standard product line, alongside custom engineering to meet the demands of a diverse client base, and are continually adding new technology and processes to meet the evolving needs of the market. Our designs are flexible to accommodate the requests of our customers, so please feel free to contact us with any special design requests or application specific questions in regards to our product.

We are located in Blaine, Minnesota, a short fifteen minute drive from Minneapolis. Our 26,000 square foot facility houses our research and development lab, modern and efficient precision machine shop, high-speed machining centers, product assembly & testing stations, quality assurance & inspection center, shipping station, and customer support center. Vertically ingrated to ensure quality and customer satisfaction.

Premier industries offers you: engineers with more than 100 years of regulator design experience, innovative technology, vertically integrated, low overhead manufacturing, competitive pricing, quick turn around on custom designs, and a responsive and experienced new product development team.

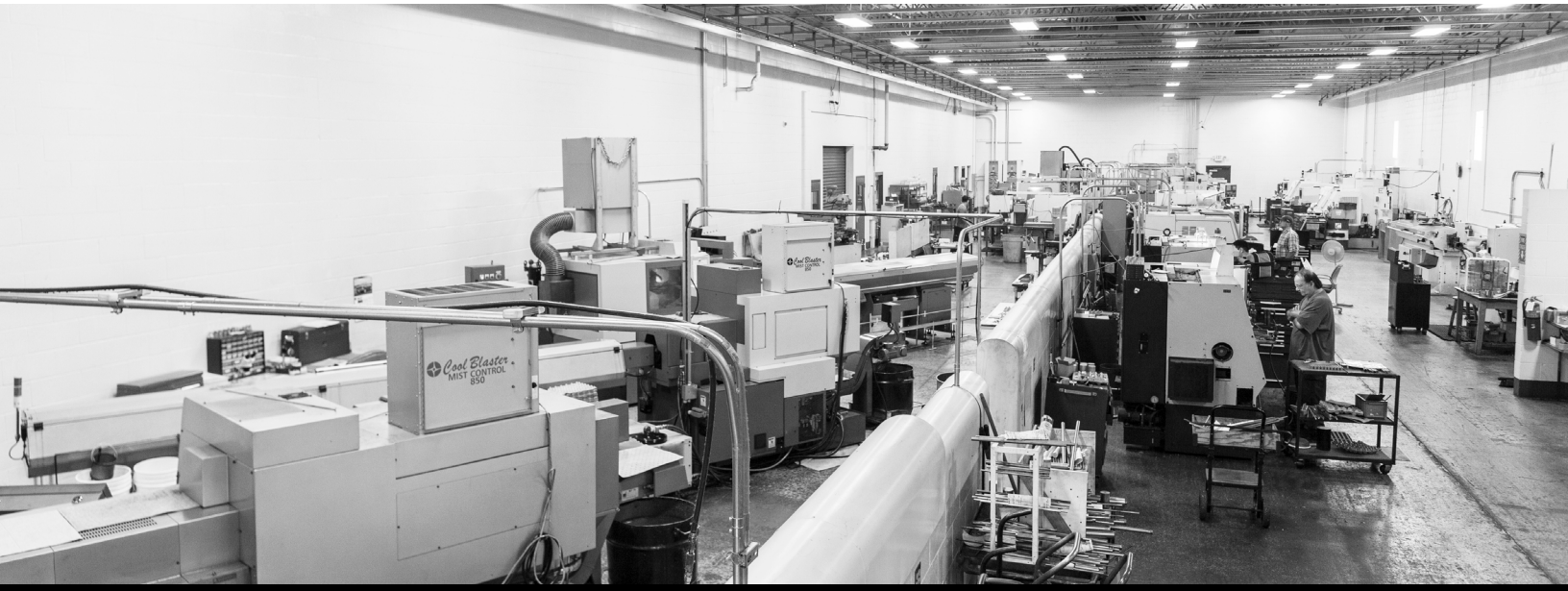

THINGS TO CONSIDER WHEN SELECTING A REGULATOR:

MEDIA
(compatible w/ materials of construction)
- Liquid
- Gas
- Corrosive
- Non-corrosive

REGULATOR TYPE
- Pressure reducing
- Back pressure
- Vacuum actuated (Demand Flow)

LOADING METHOD
- Spring loaded (hand knob)
- Dome loaded
- Air actuated
- Dome loaded with bias spring
- Electronic

SENSING ELEMENT
- Piston sensed
- Diaphragm sensed (soft/stainless steel)

STAGES
- Single stage
- Two stage – for stable delivery pressures despite changes in supply pressure.

OPERATING PRESSURES
- Max inlet pressure
- Range of fluctuation in the supply pressure
- Desired outlet pressure
- Fluctuation permitted in the outlet pressure

FLOW CAPACITY
- Desired Cv / regulator flow capacity

MATERIALS OF CONSTRUCTION
(weighing corrosion resistance, cost, weight, durability etc.)
- Body
- Bonnet
- Wetted parts
- Seat
- O-rings
- Other

VENTING
- Non-venting
- Captured venting
- Self-venting

PORTING OPTIONS
- Number of ports
- Port type
- Port size
- Porting configuration

MOUNTING OPTIONS
- Panel mounting nuts/threaded bonnet
- Mounting bracket
- Manifolds

ACCESSORIES/ADAPTERS
- Gauges
- Shut off valve
- Integrated shut off valve
- Integrated relief valve
- Purge block
- Excess flow valve
- Other

QUICK LOOK PAGE NUMBERS

7 **High Pressure**, *Pressure Reducing Regulators*

14 **High Flow**, *Pressure Reducing Regulators*

17 **Cylinder & Line**, *Pressure Reducing Regulators*

21 **Transportable**, *Pressure Reducing Regulators*

25 **High Pressure**, *Back Pressure Regulators*

27 **Misc.**, *Back Pressure Regulators*

29 **Specialty**, *Pressure Regulators*

30 **Valves & Accessories**

32 **Changeovers & Manifolds**

HIGH PRESSURE.
PRESSURE REDUCING REGULATORS.

SERIES	FEATURES	MAX INLET PRESSURE	FLOW CAPACITY	BODY MATERIAL
3400 SERIES	• Diaphragm sensed • High sensitivity • Self venting/non-venting • Captured venting • Precise outlet pressure control	6000 psig / 413.7 bar	Cv: 0.06 Cv: 0.2	6061-T6 Aluminum, Clear Anodized 303 Stainless Steel 316 Stainless Steel
3500 SERIES	• Designed for gas media • Piston sensed • 15 micron sintered 316 SST inlet filter • Non-venting • Optional acorn nut • Three knob styles • Minimal soft goods	6000 psig / 413.7 bar	Cv: 0.06 Cv: 0.2	6061-T6 Aluminum, Nickel plated SAE 360 brass, Nickel Plated 303 Stainless Steel 316 Stainless Steel Monel®
3500DL SERIES	• Dome loaded, 1:1 • 15 micron sintered 316 SST inlet filter • Pneumatic, Piston Sensed • Captured venting • Compatible with electro-pneumatic controllers	6000 psig / 413.7 bar	Cv: 0.06 Cv: 0.2	6061-T6 Aluminum, Clear Anodized 303 Stainless Steel 316 Stainless Steel
3500AL SERIES	• Pneumatic, Piston Sensed • Air loaded, 1:2, 1:3, 1:4, 1:4 + 0-150 PSIG bias • Captured venting • Compatible with electro-pneumatic controllers • 2 or 4 port designs	6000 psig / 413.7 bar	Cv: 0.06 Cv: 0.2	6061-T6 Aluminum, Clear Anodized 303 Stainless Steel 316 Stainless Steel
6500 SERIES	• Hydraulic • Piston Sensed • Non-venting • Optional acorn nut • Minimal soft goods • 3 knob styles	6000 psig / 413.7 bar	Cv: 0.06 Cv: 0.2	6061-T6 Aluminum, Nickel plated SAE 360 brass, Nickel Plated 303 Stainless Steel 316 Stainless Steel Monel®

HIGH PRESSURE.
PRESSURE REDUCING REGULATORS.

SERIES	FEATURES	MAX INLET PRESSURE	FLOW CAPACITY	BODY MATERIAL
6500DL SERIES	• Hydraulic • Dome loaded (1:1) • Piston Sensed • Captured venting • Compatible with electro-pneumatic controllers • 1000 psig (68.95 bar) max dome load	6000 psig / 413.7 bar	Cv: 0.06 Cv: 0.2	6061-T6 Aluminum, Clear Anodized 303 Stainless Steel 316 Stainless Steel
6500AL SERIES	• Hydraulic • Air loaded • Piston Sensed • Captured venting • Compatible with electro-pneumatic controllers • Load ratios: 1:2, 1:3, 1:4 • 2 or 4 port designs	6000 psig / 413.7 bar	Cv: 0.06 Cv: 0.2	6061-T6 Aluminum, Clear Anodized 303 Stainless Steel 316 Stainless Steel
4600 SERIES	• Two stage • Piston Sensed • Stable set pressures • 1st stage valve seat: Vespel® • 2nd stage valve seat PCTFE	6000 psig / 413.7 bar	Cv: 0.06 Cv: 0.2	316 Stainless Steel SAE 360 Brass, Nickel Plated
3560 SERIES	• Miniature Pneumatic • Captured-venting • Compact, piston sensed • Rear mounting holes std. • Vespel®/PEEK/PCTFE seat	10000 psig / 689.48 bar	Cv: 0.06 Cv: 0.2	316 Stainless Steel 303 Stainless Steel 6061-T6 Aluminum, Nickel Plated
6560 SERIES	• Miniature Hydraulic • Captured-venting • Compact, piston sensed • Rear mounting holes std. • Vespel® PEEK® or 17-4 & 440C Stainless steel seat	10000 psig / 689.48 bar	Cv: 0.06 Cv: 0.2	316 Stainless Steel 303 Stainless Steel

Vespel® is a registered trademark of E.I.dePont de Nemours and Company
PEEK® is a registered trademark of Victrex PLC

HIGH PRESSURE.
PRESSURE REDUCING REGULATORS.

SERIES	FEATURES	MAX INLET PRESSURE	FLOW CAPACITY	BODY MATERIAL
3000 SERIES	• Designed for gas media • Self venting, piston sensed • 15 micron sintered 316 SST inlet filter • Optional captured venting • Dome loaded & Air loaded designs available • Optional acorn nut	10000 psig / 689.5 bar *(316 SST)* 6000 psig / 413.7 bar *(Brass & Aluminum)*	Cv: 0.06 Cv: 0.12 Cv: 0.2	SAE 360 brass 316 Stainless Steel 6061-T6 Aluminum
3000AL SERIES	• Designed for gas media • Air loaded, Piston Sensed • 15 micron sintered 316 SST inlet filter • Optional captured venting • Compatible with electro-pneumatic controllers	10000 psig / 689.5 bar *(316 SST)* 6000 psig / 413.7 bar *(Brass)*	Cv: 0.06 Cv: 0.12 Cv: 0.2	SAE 360 brass 316 Stainless Steel
3000DL SERIES	• Designed for gas media • Dome loaded • Piston Sensed • Optional panel mounting nuts • Compatible with electro-pneumatic controllers	10000 psig / 689.5 bar	Cv: 0.06 Cv: 0.12 Cv: 0.2 Cv: 0.3	316 Stainless Steel
6000 SERIES	• Hydraulic, Piston Sensed • Adjustable captured venting • Air loaded design available • Optional acorn nut • Non-venting design available	10000 psig / 689.5 bar	Cv: 0.06 Cv: 0.12 Cv: 0.2	316 Stainless Steel
6000AL SERIES	• Hydraulic, Piston Sensed • Captured venting • Air loaded • Compatible with electro-pneumatic controllers	10000 psig / 689.5 bar 6000 psig / 413.7 bar *(Brass)*	Cv: 0.06 Cv: 0.12 Cv: 0.2 Cv: 0.3	316 Stainless Steel

HIGH PRESSURE.
PRESSURE REDUCING REGULATORS.

SERIES	FEATURES	MAX INLET PRESSURE	FLOW CAPACITY	BODY MATERIAL
6000DL SERIES	• Hydraulic, Piston Sensed • Captured venting • Dome loaded • Compatible with electro-pneumatic controllers	10000 psig / 689.5 bar Cv: 0.2	Cv: 0.06 Cv: 0.12 Cv: 0.2 Cv: 0.3	316 Stainless Steel
6000FL SERIES	• Hydraulic, Piston Sensed • Raised face, welded neck flange connections • 1" nominal pipe size • Captured venting • ANSI B16.5 class 1500 forged flange	3000 psig / 206.84 bar	Cv: 0.06	17-4 Stainless Steel 316 Stainless Steel
3016 SERIES	• Designed for gas media • **High flow** • Piston Sensed • Self venting • Optional captured venting • Air loaded & dome loaded designs available	10000 psig / 689.5 bar *(Stainless Steel)* 6000 psig / 413.7 bar *(Brass)*	Cv: 1.0 Cv: 2.0	SAE 360 brass 316 Stainless Steel 17-4 Stainless Steel Monel®
3016AL SERIES	• Designed for gas media • **High flow** • Piston Sensed • Self venting • Optional captured venting • Air loaded & dome loaded designs available	10000 psig / 689.5 bar *(See data sheet)* 6000 psig / 413.7 bar *(See data sheet)*	Cv: 1.0 Cv: 2.0	SAE 360 brass 316 Stainless Steel 303 Stainless Steel
3016DL SERIES	• Designed for gas media • Dome loaded • **High flow** • Piston Sensed • Captured venting	10000 psig / 689.5 bar *(See data sheet)* 6000 psig / 413.7 bar *(See data sheet)*	Cv: 2.0	316 Stainless Steel 17-4 Stainless Steel

Monel® is a registered trademark of Special Metals Corporation.

HIGH PRESSURE.
PRESSURE REDUCING REGULATORS.

SERIES	FEATURES	MAX INLET PRESSURE	FLOW CAPACITY	BODY MATERIAL
3020 SERIES	• Designed for gas media • 15 micron stainless steel valve cartridge filter • Piston Sensed • Captured venting • Low-torque hand knob	10000 psig / 689.5 bar *(Stainless Steel)* 6000 psig / 413.7 bar *(Brass)*	Cv: 0.04 Cv: 0.06 Cv: 0.12 Cv: 0.2 Cv: 0.3	SAE 360 brass 316 Stainless Steel
6020 SERIES	• Hydraulic • Piston Sensed • Captured venting • Low-torque hand knob	10000 psig / 689.5 bar *(Stainless Steel)* 6000 psig / 413.7 bar *(Brass)*	Cv: 0.06 Cv: 0.12 Cv: 0.2 Cv: 0.3	SAE 360 brass 316 Stainless Steel
3023 SERIES	• Designed for gas media • Captured venting • Piston Sensed • Vespel® seat • Optional panel mounting nuts	15000 psig / 1034.21 bar	Cv: 0.06 Cv: 0.12 Cv: 0.20 Cv: 0.30	316 Stainless Steel
3023AL SERIES 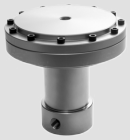	• Designed for gas media • Air loaded, Piston Sensed • Compatible with electro-pneumatic controllers • Captured venting • Optional panel mounting nuts & gauges	15000 psig / 1034.21 bar	Cv: 0.06 Cv: 0.12	316 Stainless Steel
3023DL SERIES	• Designed for gas media • Dome loaded, Piston Sensed • Captured venting	15000 psig / 1034.21 bar	Cv: 0.06 Cv: 0.12 Cv: 0.2	316 Stainless Steel
6023 SERIES	• Hydraulic, piston sensed • Captured venting • Choice of 17-4 stainless steel or Vespel® seat • Optional panel mounting nuts	15000 psig / 1034.21 bar	Cv: 0.06 Cv: 0.12	316 Stainless Steel

Vespel® is a registered trademark of E.I.dePont de Nemours and Company

HIGH PRESSURE.
PRESSURE REDUCING REGULATORS.

SERIES	FEATURES	MAX INLET PRESSURE	FLOW CAPACITY	BODY MATERIAL
6023DL SERIES 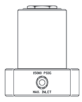	• Hydraulic • Dome loaded, Piston Sensed • Captured venting	15000 psig / 1034.21 bar	Cv: 0.06 Cv: 0.12 Cv: 0.2	316 Stainless Steel
6023AL SERIES	• Hydraulic, air loaded • Captured venting • 17-4 Stainless Steel, hardened or Vespel® seat • Optional panel mounting nuts	15000 psig / 1034.21 bar	Cv: 0.06 Cv: 0.12 Cv: 0.20	316 Stainless Steel
3025 SERIES	• Piston Sensed • Pneumatic • Captured venting • 17-4 Stainless Steel hardened valves • Air loaded designs available	20000 psig / 1378.95 bar	Cv: 0.04	17-4 Stainless Steel
3025AL SERIES	• Piston Sensed • Air loaded • Captured venting • 17-4 Stainless Steel hardened valves • Compatible w/ electro-pneumatic controllers	20000 psig / 1378.95 bar	Cv: 0.043	17-4 Stainless Steel
3025HPL SERIES	• Piston Sensed • High pressure loaded • Captured venting • 1500 psig (103.42 bar) max loading pressure	20000 psig / 1378.95 bar	Cv: 0.04	17-4 Stainless Steel

Vespel® is a registered trademark of E.I.dePont de Nemours and Company

HIGH PRESSURE.
PRESSURE REDUCING REGULATORS.

SERIES	FEATURES	MAX INLET PRESSURE	FLOW CAPACITY	BODY MATERIAL
6025 SERIES	• Hydraulic • Piston Sensed • Captured venting • 17-4 Stainless Steel hardened valves • Air loaded designs available	20000 psig / 1378.95 bar	Cv: 0.06 Cv: 0.12 Cv: 0.20	17-4 Stainless Steel
6025AL SERIES	• Hydraulic, Piston Sensed • Air loaded • Captured venting • 17-4 SS hardened valves • Compatible w/ electro-pneumatic controllers	20000 psig / 1378.95 bar	Cv: 0.06 Cv: 0.12 Cv: 0.30	17-4 Stainless Steel
RO.1 SERIES	• Roughing regulator • Used with high pressure regulators for increased outlet pressure stability • 7/8" hex for easy torque	10000 psig / 689.5 bar	Cv: 0.1	316 Stainless Steel 303 Stainless Steel

HIGH FLOW.
PRESSURE REDUCING REGULATORS.

SERIES	FEATURES	MAX INLET PRESSURE	FLOW CAPACITY	BODY MATERIAL
2800N SERIES	• Neoprene *(fabric reinforced)* diaphragm • PCTFE seat • Stable delivery pressure • Outlet pressures up to 150 PSIG / 10.34 bar	3000 psig / 206.84 bar	Cv: 1.0 Cv: 2.0	SAE 360 Brass, Bright Dip SAE 360 Brass, Nickel Plated 6061-T6 Aluminum 303 Stainless Steel
2800S SERIES	• 316 Stainless Steel or Neoprene *(fabric reinforced)* diaphragm • PCTFE or Vespel® seat • Outlet pressures up to 150 PSIG / 10.34 bar	3000 psig / 206.84 bar	Cv: 1.0 Cv: 2.0	SAE 360 Brass, Bright Dip SAE 360 Brass, Nickel Plated 6061-T6 Aluminum, Clear Anodized 316 Stainless Steel
2800P SERIES	• Piston sensed for increased cycle life • PCTFE or PEEK®seat • Outlet pressures up to 500 PSIG / 34.47 bar	3000 psig / 206.84 bar	Cv: 1.0 Cv: 2.0	SAE 360 Brass, Nickel Plated 6061-T6 Aluminum, Clear Anodized 316 Stainless Steel
2800PDL SERIES	• Piston sensed for increased cycle life • Dome load: 1:1, *(1000 psig / 68.95 max load)* • PCTFE seat • Non-venting	3000 psig / 206.84 bar	Cv: 2.0	SAE 360 Brass, Bright Dip 6061-T6 Aluminum, Clear Anodized 316 Stainless Steel
2860PDL SERIES	• Captured venting • Dome load: 1550 PSIG (106.9 bar) max • High flow • Piston sensed • PCTFE seat	3000 psig / 206.84 bar	Cv: 2.0	SAE 360 Brass, Nickel Plated 6061-T6 Aluminum, Clear Anodized 316 Stainless Steel 303 Stainless Steel

PEEK® is a registered trademark of Victrex PLC

HIGH FLOW.
PRESSURE REDUCING REGULATORS.

SERIES	FEATURES	MAX INLET PRESSURE	FLOW CAPACITY	BODY MATERIAL
5000 SERIES	• Piston sensed • Vespel® seat • Outlet pressures up to 2500 psig / 6.89 bar	4500 psig / 172.37 bar	Cv: 1.0 Cv: 2.0	303 Stainless Steel
5033DL SERIES	• Dome loaded • Piston sensed • 1:1 dome load • Optional external sensing port for improved accuracy	6000 psig / 413.7 bar	Cv: 3.3	316 Stainless Steel
5050 SERIES	• Preset outlet pressures • Diaphragm sensed • Buna-n or Viton® seat • Max preset outlet pressure 200 psig / 13.79 bar	1000 psig / 68.95 bar	Cv: 5.0	303 Stainless Steel 316 Stainless Steel Aluminum, Clear Anodize Monel 400®
5050DL SERIES	• Dome loaded • Diaphragm sensed • Buna-n seat • 1:1 dome load • Max dome load 100 psig / 6.89 bar	1000 psig / 68.95 bar	Cv: 5.0	303 Stainless Steel 316 Stainless Steel Aluminum, Clear Anodize
5050DLB SERIES	• Dome loaded / bias spring • Diaphragm sensed • Buna-n seat • dome load + bias spring pressure = outlet pressure • Max dome load 100 psig / 6.89 bar	1000 psig / 68.95 bar	Cv: 5.0	303 Stainless Steel 316 Stainless Steel Aluminum, Clear Anodize

Vespel® and Viton® are registered trademarks of E.I.dePont de Nemours and Company

HIGH FLOW.
PRESSURE REDUCING REGULATORS.

SERIES	FEATURES	MAX INLET PRESSURE	FLOW CAPACITY	BODY MATERIAL
5060DL SERIES	• Dome loaded • Piston sensed • 1:1 dome load • Optional external sensing port for improved accuracy	6000 psig / 413.7 bar	Cv: 6.0	316 Stainless Steel
3016 SERIES	• Designed for gas media • High flow • Piston Sensed • Self venting, anon-venting and captured venting options • Great sensitivity	10000 psig / 689.5 bar *(See data sheet)* 6000 psig / 413.7 bar *(See data sheet)*	Cv: 1.0 Cv: 2.0	SAE 360 brass 316 Stainless Steel 303 Stainless Steel Monel 400®
3016AL SERIES	• Designed for gas media • High flow • Piston Sensed • Self venting • Optional captured venting • Spring loaded designs available	10000 psig / 689.5 bar *(Cv 1.0)* 6000 psig / 413.7 bar *(Cv 2.0)*	Cv: 1.0 Cv: 2.0	316 Stainless Steel
3016DL SERIES	• Dome loaded • Piston sensed • 1:1 dome load • Compatible with electro-pneumatic controllers	10000 psig / 689.5.7 bar	Cv: 2.0	316 Stainless Steel 17-4 Stainless Steel

Monel® is a registered trademark of Special Metals Corporation.

CYLINDER AND LINE.
PRESSURE REDUCING REGULATORS.

SERIES	FEATURES	MAX INLET PRESSURE	FLOW CAPACITY	BODY MATERIAL
2500 SERIES	• Neoprene or 316 stainless steel diaphragm • PTFE seat • Single stage • Outlet pressures up to 500 PSIG / 34.47 bar • 15 micron valve cartiridge filter • Optional body diameters: 1.5", & 1.98"	3500 psig / 241.3 bar	Cv: 0.08 Cv: 0.20	SAE 360 Brass, Bright Dip SAE 360 Brass, Nickel Plated 6061-T6 Aluminum, Clear Anodized 316 Stainless Steel Monel®
2500A SERIES	• **Absolute pressure regulator** • Control pressures range: 50 mm Hg absolute - 15 psig (1.0 bar) • Elgiloy® diaphragm • PFA seat • Captured bonnet vent	3000 psig / 206.84 bar	Cv: 0.08	SAE 360 Brass, Nickel Plated
2500DL SERIES	• **Dome loaded** • Neoprene diaphragm (0.785:1 load ratio) or 316 stainless steel diaphragm (1:1 load ratio) • PCTFE seat • Control pressures up to 500 PSIG / 34.47 bar	3000 psig / 206.84 bar	Cv: 0.08 Cv: 0.20	SAE 360 Brass, Nickel Plated SAE 360 Brass, Bright Dip 316 Stainless Steel
2500DLB SERIES	• **Dome loaded /bias spring** • 316 stainless steel diaphragm • PCTFE seat • Outlet pressures up to 500 PSIG / 34.47 bar • Preset spring bias	3000 psig / 206.84 bar	Cv: 0.08 Cv: 0.20	316 Stainless Steel 303 Stainless Steel Monel 405® SAE 360 Brass, Nickel Plated

Monel® is a registered trademark of Special Metals Corporation
Elgiloy® is a registered trademark of Elgiloy Specialty Metals Division, Combined Metals of Chicago L.L.C

CYLINDER AND LINE.
PRESSURE REDUCING REGULATORS.

SERIES	FEATURES	MAX INLET PRESSURE	FLOW CAPACITY	BODY MATERIAL
2510 SERIES	• **Reduced decaying inlet characteristic in a single stage design** • Neoprene or 316 stainless steel diaphragm • PCTFE, or PTFE seat • Outlet pressures up to 500 PSIG / 34.47 bar	3500 psig / 241.3 bar	Cv: 0.20	SAE 360 Brass, Nickel Plated SAE 360 Brass, Bright Dip 303 Stainless Steel 316 Stainless Steel
2550 SERIES	• **High sensitivity** • 316 stainless steel or neoprene diaphragm • PTFE seat • Outlet pressures up to 250 PSIG / 17.24 bar	3000 psig / 206.84 bar	Cv: 0.08 *(standard)* Cv: 0.2	SAE 360 Brass, Bright Dip SAE 360 Brass, Nickel Plated 6061-T6 Aluminum, Clear Anodized 316 Stainless Steel
2550A SERIES	• **High sensitivity** • Absolute pressure regulator • PTFE seat • Elgiloy® diaphragm • Outlet pressure range: • 50 mm Hg absolute - 15 psig (30" HG-30 psig	3000 psig / 206.84 bar	Cv: 0.08	316 Stainless Steel
4050 SERIES	• **High sensitivity, two stage** • Adjustable to within 0.2 inches H_2O / 0.007 psig of target pressure on the 0-2 psig control pressure configuration	3000 psig / 206.84 bar	15 SLPM	SAE 360 Brass, Bright Dip SAE 360 Brass, Nickel Plated

Elgiloy® is a registered Trademark of Elgiloy Specialty Metals Division, Combined Metals of Chicago L.L.C

CYLINDER AND LINE.
PRESSURE REDUCING REGULATORS.

SERIES	FEATURES	MAX INLET PRESSURE	FLOW CAPACITY	BODY MATERIAL
2600 SERIES	• Piston sensed • PCTFE seat • Outlet pressures up to 2500 PSIG / 172.37 bar • Optional panel mounting nut • Non-venting	3500 psig / 241.32 bar	Cv: 0.08 Cv: 0.20 Cv: 0.30	SAE 360 Brass, Bright Dip SAE 360 Brass, Nickel Plated 6061-T6 Aluminum, Clear Anodized 316 Stainless Steel 303 Stainless Steel
2610 SERIES	• Reduced decaying inlet characteristic • Piston sensed • PCTFE seat • Outlet pressures up to 2500 PSIG / 172.37 bar	3750 psig / 258.55 bar	Cv: 0.20	6061-T6 Aluminum, Clear Anodized 316 Stainless Steel 303 Stainless Steel
2660 SERIES	• Self venting • Piston sensed • PCTFE main valve seat • Outlet pressures up to 1000 PSIG / 68.95 bar • Optional panel mounting nut	3500 psig / 241.32 bar	Cv: 0.08 Cv: 0.20	SAE 360 Brass, Nickel Plated 303 Stainless Steel 316 Stainless Steel
4500 SERIES	• **Two stage design** for stable delivery pressures • 15 micron valve cartridge filter • Interstage relief valve • 316 stainless steel diaphragm • PTFE seat • Outlet pressures up to 250 PSIG / 17.24 bar	3000 psig / 206.84 bar	Cv: 0.08 Cv: 0.20	SAE 360 Brass, Bright Dip SAE 360 Brass, Nickel Plated 6061-T6 Aluminum, Clear Anodized 316 Stainless Steel

CYLINDER AND LINE.
PRESSURE REDUCING REGULATORS.

SERIES	FEATURES	MAX INLET PRESSURE	FLOW CAPACITY	BODY MATERIAL
6250 SERIES	• 316 Stainless Steel or Elgiloy® diaphragm • PEEK®, or Vespel® seat • Outlet pressures up to 500 PSIG / 34.47 bar • Optional panel mounting nuts or bottom mount	3500 psig / 241.3 bar	Cv: 0.20	6061-T6 Aluminum, Clear Anodized SAE 360 Brass, Nickel Plated 316 Stainless Steel Inconel 625
6250DLB SERIES	• 316 Stainless Steel diaphragm • PEEK® seat • 1:1 Dome load: up to 500 psig / 34.47 bar • Preset spring bias: up to 100 psig / 6.89 bar • Elastomer Free	3000 psig / 206.84 bar	Cv: 0.08 Cv: 0.20	SAE 360 Brass, Nickel Plated 303 Stainless Steel 316 Stainless Steel Monel®

Vespel® is a registered trademark of E.I.dePont de Nemours and Company
PEEK® is a registered trademark of Victrex PLC
Elgiloy® is a registered trademark of Elgiloy Specialty Metals Division, Combined Metals of Chicago L.L.C

TRANSPORTABLE.
PRESSURE REDUCING REGULATORS.

SERIES	FEATURES	MAX INLET PRESSURE	FLOW CAPACITY	BODY MATERIAL
2300N SERIES	• Single stage • Neoprene or Viton® diaphragm • Neoprene seat • Outlet pressures up to 60 psig / 4.14 bar	500 psig / 34.5 bar *(dependent upon configuration)*	Cv: 0.04	SAE 360 Brass, Bright Dip 6061-T6 Aluminum, Clear Anodized
2300S SERIES	• Single stage • Elastomer free • Elgiloy® diaphragm • PTFE seat • Outlet pressures up to 150 psig /10.34 bar	3000 psig / 206.84 bar	Cv: 0.05	SAE 360 Brass, Nickel Plated 6061-T6 Aluminum, Nickel Plated 316 Stainless Steel 303 Stainless Steel
2300C SERIES	• Designed for use w/ disposable gas cartridges • Robust stainless steel piercing tip • Integrated relief valve • Adjusting knob w/ locking nut	3500 psig / 241.3 bar	Cv: 0.04	SAE 360 Brass, Bright Dip 6061-T6 Aluminum, Clear Anodized
2310N SERIES	• Single stage • Neoprene diaphragm • PFA seat • Reduced decaying inlet characteristic • Adjusting knob with locking-nut	3000 psig / 206.8 bar	Cv: 0.025	6061-T6 Aluminum, Clear Anodized
2310S SERIES	• Single stage • Elgiloy® diaphragm • PTFE seat • Reduced decaying inlet characteristic • Reduced contamination & outgassing w/Elgiloy® diaphragm, stainless body, & stainless wetted parts	3000 psig / 206.8 bar	Cv: 0.05	SAE 360 Brass, Nickel Plated 6061-T6 Aluminum, Nickel Plated 316 Stainless Steel 303 Stainless Steel

Viton® is a registered trademarks of E.I.dePont de Nemours and Company.
Elgiloy® is a registered trademark of Elgiloy Specialty Metals Division, Combined Metals of Chicago L.L.C.

TRANSPORTABLE.
PRESSURE REDUCING REGULATORS.

SERIES	FEATURES	MAX INLET PRESSURE	FLOW CAPACITY	BODY MATERIAL
2310C SERIES	• Single stage • Viton® or neoprene diaphragm • PFA seat • Outlet pressures up to 60 psig / 4.14 bar • Stainless steel piercing tip • Reduced decaying inlet characteristic • Integrated relief valve • Adjusting knob with locking-nut	3000 psig / 206.84 bar	Cv: 0.025	SAE 360 Brass, Bright Dip 6061-T6 Aluminum, Clear Anodized
2700 SERIES	• Piston sensed • PTFE seat • Outlet pressures up to 60 psig / 4.14 bar • Factory preset flow settings from 0.25 liters/ min to 9.0 liters/min • Wide variety of shut off valve options	3000 psig / 206.84 bar	preset: 0.25 lpm - 9.0 lpm	SAE 360 Brass, Bright Dip SAE 360 Brass, Nickel Plated 6061-T6 Aluminum, Clear Anodized 316 Stainless Steel
2701 SERIES	• Piston sensed • PTFE seat • Standard preset control pressure: 40-80 psig *(2.76 - 5.52 bar)* • Factory preset flow from 0.1 to 4.0 liters/min • Wide variety of shut off valve options	3000 psig / 206.84 bar	preset: 0.1 slpm - 4.0 slpm	SAE 360 Brass, Nickel Plated 6061-T6 Aluminum, Clear Anodized

Viton® is a registered trademarks of E.I.dePont de Nemours and Company.
Elgiloy® is a registered trademark of Elgiloy Specialy Metals Division, Combined Metals of Chicago L.L.C.

TRANSPORTABLE.
PRESSURE REDUCING REGULATORS.

SERIES	FEATURES	MAX INLET PRESSURE	FLOW CAPACITY	BODY MATERIAL
2780 SERIES	• Piston sensed • Compact and light-weight • PTFE seat • Outlet pressures up to 60 psig / 4.14 bar • Factory preset flow settings from 0.25 liters/ min to 7.0 liters/min	1000 psig / 68.95 bar	preset: 0.25 lpm - 7.0 lpm	6061-T6 Aluminum, Clear Anodized 303 Stainless Steel SAE 360 Brass
2790 SERIES	• Piston sensed • Compact and light-weight manifold regulator • PTFE seat • Outlet pressures up to 500 psig / 34.47 bar • Single stage and two stage designs	1500 psig / 103.42 bar 3000 psig/ 206.84 bar	Cv: 0.0025	6061-T6 Aluminum, Clear Anodized 316 Stainless Steel 303 Stainless Steel Titanium TI-6AL-4V
2900 SERIES	• Adjustable Click stop, 12 position, variable flow settings from 0 to 8.0 lpm • PTFE seat • Standard preset control pressure 15 psig / 1.03 bar • Integral relief valve • Optional two-stage design	3500 psig / 241.3 bar	0.3, 0.5, 1.0, 1.5, 2.0, 2.5, 3.0, 5.0, 6.0, 7.0, 8.0 SLPM	6061-T6 Aluminum, Clear Anodized
4300N SERIES	• **Two stage regulator** • 1st stage piston, 2nd stage neoprene or viton® diaphragm • PTFE & neoprene seats • Outlet pressures up to 100 PSIG / 6.89 bar • Precise stable delivery pressure even as the supply pressure decreases • Low internal volume	3000 psig / 206.84 bar	Cv: 0.04	6061-T6 Aluminum, Clear Anodized 303 Stainless Steel

Viton® is a registered trademark of E.I.dePont de Nemours and Company,

TRANSPORTABLE.
PRESSURE REDUCING REGULATORS.

SERIES	FEATURES	MAX INLET PRESSURE	FLOW CAPACITY	BODY MATERIAL
4300S SERIES	• **Two stage regulator** • 1st stage piston, 2nd stage Elgiloy® diaphragm • PTFE seats • Outlet pressures up to 100 PSIG / 6.89 bar • Precise stable delivery pressure even as the supply pressure decreases • Low internal volume	3000 psig / 206.84 bar	Cv: 0.014	SAE 360 Brass, Nickel Plated 6061-T6 Aluminum, Clear Anodized 303 Stainless Steel 316 Stainless Steel Monel®
4700 SERIES	• **Two stage design** for stable delivery pressures • 40 micron integral inlet filter • Preset, fixed flow • Piston sensed • PTFE seat	3000 psig / 206.84 bar	preset: 0.25 lpm - 9.0 lpm	SAE 360 Brass, Bright Dip SAE 360 Brass, Nickel Plated 6061-T6 Aluminum, Clear Anodized 303 Stainless Steel

Elgiloy® is a registered trademark of Elgiloy Specialy Metals Division, Combined Metals of Chicago L.L.C.

HIGH PRESSURE.
BACK PRESSURE REGULATORS.

SERIES	FEATURES	MAX INLET PRESSURE	FLOW CAPACITY	BODY MATERIAL
3100 SERIES	• Designed for gas media • Piston sensed • Vespel®, PEEK®, or PCTFE seat • Optional panel mounting bracket	10000 psig / 689.5 bar *(Stainless Steel)* 6000 psig / 413.7 bar *(Brass)*	Cv: 0.03 Cv: 0.06 Cv: 0.14 Cv: 0.2	316 Stainless Steel SAE 360 Brass
3100AL SERIES	• Air loaded, Piston sensed • Vespel® or PEEK®seat • Optional panel mounting bracket • Compatible with electro-pneumatic controllers	10000 psig / 689.5 bar *(Stainless Steel)* 6000 psig / 413.7 bar *(Brass)*	Cv: 0.03 Cv: 0.06 Cv: 0.14 Cv: 0.2	316 Stainless Steel SAE 360 Brass
3100DL SERIES	• Designed for gas media • Dome loaded, Piston sensed • Vespel® main valve seat • Compatible with electro-pneumatic controllers	6000 psig / 413.7 bar	Cv: 0.06 Cv: 0.14 Cv: 0.2	316 Stainless Steel SAE 360 Brass
6100 SERIES	• Hydraulic • Piston sensed • Choice of seat: Vespel®, 316 Stainless Steel, PEEK®, or 17-4 Stainless Steel hardened • Optional panel mounting bracket	10000 psig / 689.5 bar 6000 psig / 413.7 bar	Cv: 0.03 Cv: 0.06 Cv: 0.14 Cv: 0.2	316 Stainless Steel 17-4 Stainless Steel
6100AL SERIES	• Hydraulic, Piston Sensed • Choice of seat: Vespel®, PEEK®, 316 SS or 17-4SS hardened • Optional panel mounting bracket	10000 psig / 689.5 bar *(Stainless Steel)* 6000 psig / 413.7 bar *(Brass)*	Cv: 0.03 Cv: 0.06 Cv: 0.14 Cv: 0.2	316 Stainless Steel SAE 360 Brass

Vespel® is a registered trademark of E.I.dePont de Nemours and Company
PEEK® is a registered trademark of Victrex PLC

HIGH PRESSURE.
BACK PRESSURE REGULATORS.

SERIES	FEATURES	MAX INLET PRESSURE	FLOW CAPACITY	BODY MATERIAL
6100DL SERIES	• Hydraulic • Piston Sensed • Choice of seat: Vespel®, or 17-4 Stainless Steel • Optional panel mounting bracket • Compatible w/ electro pneumatic controllers	6000 psig / 413.7 bar	Cv: 0.06 Cv: 0.14 Cv: 0.2 Cv 0.4 optional	316 Stainless Steel SAE 360 Brass
3123 SERIES	• Designed for gas media • Piston sensed • Choice of seat: Vespel®, or PEEK® • Optional panel mounting bracket	15000 psig / 1034.21 bar	Cv: 0.06 Cv: 0.14 Cv: 0.2	316 Stainless Steel
3123AL SERIES	• Designed for gas media • Piston sensed • Choice of seat: Vespel®, PEEK®, 316 Stainless Steel, or 17-4 Stainless Steel • Optional panel mounting bracket	15000 psig / 1034.21 bar	Cv: 0.06 Cv: 0.14 Cv: 0.2	316 Stainless Steel
6123 SERIES	• Hydraulic • Piston sensed • Choice of seat: Vespel®, PEEK®, 316 Stainless Steel, or 17-4 Stainless Steel • Optional panel mounting bracket	15000 psig / 1034.21 bar	Cv: 0.06 Cv: 0.14 Cv: 0.2	316 Stainless Steel

Vespel® is a registered trademark of E.I.dePont de Nemours and Company
PEEK® is a registered trademark of Victrex PLC

MISC.
BACK PRESSURE REGULATORS.

SERIES	FEATURES	FLOW CAPACITY	BODY MATERIAL
2100 SERIES	• Elgiloy ® diaphragm • Max control pressure of 500 psig / 34.5 bar • PFA seat • Optional metal to metal seat	Cv: 0.14 Cv: 0.2 Cv: 0.06	316 Stainless Steel 303 Stainless Steel SAE 360 Brass, Duplex 2205
2100DLB SERIES	• Dome loaded / bias spring • Elastomer free • Max load pressure of 500 psig / 34.5 bar • PCTFE seat • Preset spring bias up to 100 psig / 6.89 bar	Cv: 0.14 Cv: 0.2	316 Stainless Steel
2150A SERIES	• Absolute pressure regulator • Stainless diaphragm • Inlet pressures from -28" Hg Absolute-100 PSIG • PTFE seat and seals • Captured bonnet vent	Cv: 0.04 Cv: 0.2	316 Stainless Steel
2400 SERIES	• High sensitivity • Viton® diaphragm with stainless steel liner • Viton® seat • Optional panel mounting nut • Control pressures up to 25 psig / 1.72 bar	Cv: 0.6	6061-T6 Aluminum, Nickel Plated 303 Stainless Steel
2400DL SERIES	• Dome loaded, high sensitivity • Viton® diaphragm • Viton® seat • 1.3 to 1 dome load • Cracking pressure: 0-75 PSIG (0-5.17 bar)	Cv: 0.6	303 Stainless Steel

Viton® is a registered trademark of E.I.dePont de Nemours and Company
Elgiloy® is a registered trademark of Elgiloy Specialy Metals Division, Combined Metals of Chicago L.L.C.

MISC.
BACK PRESSURE REGULATORS.

SERIES	FEATURES	FLOW CAPACITY	BODY MATERIAL
5150 SERIES	• High Flow / Low Pressure • Piston sensed • Compact, non-rising stem • Control pressures up to 200 psig / 13.79 bar	Cv: 5.0	6061-T6 Aluminum, Clear Anodized 303 Stainless Steel 316 Stainless Steel
5150AL SERIES	• High Flow / Low Pressure • Air Loaded • PTFE seat • Piston sensed • 100 psig / 6.89 bar max load • Control pressures up to 600 psig / 41.37 bar	Cv: 5.0	6061-T6 Aluminum, Clear Anodized 303 Stainless Steel 316 Stainless Steel
P91W SERIES	• Dome loaded mity mite replacement • Gylon® 3522 diaphragm • Control pressures up to 3000 psig / 206.8 bar • Optional precharge isolation valve	Cv: 0.38 Cv: 0.17	316 Stainless Steel 2024-T4 Aluminum Hastelloy

Gylon® is a registered trademark of Garlock, Inc.

SPECIALTY.
PRESSURE REGULATORS.

SERIES	FEATURES	MAX INLET PRESSURE	FLOW CAPACITY	BODY MATERIAL
4902 SERIES	• Demand flow regulator • Diaphragm Sensed (Buna-n or Viton®) • The unique high flow capability allows multiple analyzers on a single docking station • Integral relief valve • 40 micron stainless steel inlet filter	3000 psig / 206.82 bar	3.0 lpm @ 3" H_2O up to 8 lpm with increased vacuum	6061-T6 Aluminum, Clear Anodized 303 Stainless Steel SAE 360 Brass, Nickel Plated
4903 SERIES	• Demand flow regulator • Diaphragm Sensed (Buna-n or Viton®) • Compact size (2" diameter) • 40 micron stainless steel inlet filter • Stainless steel body & wetted components provide minimum degradation to cylinder gases.	3000 psig / 206.82 bar	Permits the flow of gas at less than 3" H_2O	303 Stainless Steel 6061-T6 Aluminum, Clear Anodize SAE 360 Brass, Nickel Plated

Viton® is a registered trademark of E.I.dePont de Nemours and Company

VALVES.
AND ACCESSORIES.

SERIES	FEATURES	MAX INLET PRESSURE	SEAT MATERIAL	BODY MATERIAL
AO VALVES	• High operating pressures • Low actuation pressure: 100-150 psig (6.89-10.3 bar) • Stainless steel body • Compatible with electro-pneumatic controllers • Optional solenoid adapter	10000 psig / 689.5 bar	Vespel®	316 Stainless Steel 303 Stainless Steel
STAINLESS STEEL SHUT OFF VALVES	• 17-4 stainless steel valve stem • Cv: 0.25 • Optional integrated burst disks and relief valves • Optional dip tube	3000 psig / 206.82 bar	PCTFE or PEEK®	316 Stainless Steel
MINIATURE BRASS SHUT OFF VALVES	• 303 stainless steel valve stem • Cv: 0.25 • Metal to metal seal	3000 psig / 206.82 bar	SAE 360 Brass	SAE 360 Brass
EXCESS FLOW PREVENTION VALVES	• Automatically shut off the flow of gas when flow exceeds a preset level. Factory adjustable flow trip point • Convenient integrated bypass valve/reset slider • Complete shut off when tripped (no bleed) • High Sensitivity model	3000 psig / 206.82 bar *(dependent upon configuration)*		SAE 360 Brass, Bright Dip 303 Stainless Steel 6061-T6 Aluminum, Clear Anodized
PA32 SERIES	• Pneumatically actuated • 3 way valve • Normally open or normally closed operation • Cv: 0.025 • High process pressures for heavy actuation loads	3000 psig / 206.82 bar		SAE 360 Brass 17-4 Stainless Steel 303 Stainless Steel

VALVES.
AND ACCESSORIES.

SERIES	FEATURES	MAX INLET PRESSURE	SEAT MATERIAL	BODY MATERIAL
FLOW SIGHT TUBE VALVE	• Acrylic flow indicator • Needle style shut off valve	600 psig / 41.37 bar		SAE 360 Brass
SAMPLING CYLINDERS	• Seamless 316 stainless steel cylinders • 316 stainless steel inlet and outlet valves • 50 cc, 150cc, 300cc, 500cc cylinders • Optional pressure relief devices	1800 psig / 124.11 bar *(cylinders)* 3000 psig / 206.82 bar *(valves)*	PCTFE valve seats	316 Stainless Steel *(cylinders & valves)*
70A SERIES	• Angle configuration • Low torque at high pressures • Metal-to-metal stop that prevents stem over-travel	10000 psig / 689.5 bar	PTFE PCTFE PEEK® Vespel-SP-1®	316 Stainless Steel SAE 360 Brass
70AB SERIES	• Low torque at high pressures • Metal-to-metal stop that prevents stem over-travel • Can be used to bleed downstream pressure to 0	10000 psig / 689.5 bar	PTFE PCTFE PEEK® Vespel-SP-1®	316 Stainless Steel SAE 360 Brass
RELIEF VALVE	• Reset relief pressures between 500-1800 psig • Captured outlet		PCTFE	316 Stainless Steel 303 Stainless Steel 6061-T6 Aluminum, Nickel Plated SAE 360 Brass

Vespel® is a registered trademark of E.I.dePont de Nemours and Company
PEEK® is a registered trademark of Victrex PLC

MANIFOLDS AND CHANGOVERS
GAS DELIVERY SYSTEMS

SERIES	STANDARD COMPONENTS	MAX INLET PRESSURE	MAX PROCESS FLOW RATE	BODY MATERIAL
CR2500 SERIES	• One stainless steel diaphragm changeover regulator	3000 psig / 206.84 bar	Cv: 0.08 Cv: 0.2	SAE 360 Brass SAE 360 Brass, Nickel Plated 316 Stainless Steel 6061-T6 Aluminum, Clear Anodized
ACS2500 SERIES	• 2 - Premier 2500 Series, single stage regulators • Integrated relief valve • Stainless steel mounting bracket	3000 psig / 206.84 bar *dependent upon configuration*	Cv: 0.20	SAE 360 Brass, Bright Dip SAE 360 Brass, Nickel Plated 6061-T6 Aluminum, Clear Anodized 316 Stainless Steel
CS2300 SERIES 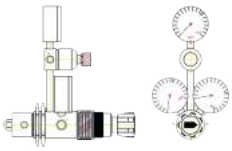	• 1 - Premier changeover regulator • 1 - Premier 2300 Series, line regulator • 2 - Panel Mounting Nuts	3000 psig / 206.84 bar *dependent upon configuration*	Cv: 0.08	SAE 360 Brass, Bright Dip SAE 360 Brass, Nickel Plated 6061-T6 Aluminum, Clear Anodized 316 Stainless Steel
CS2500 SERIES 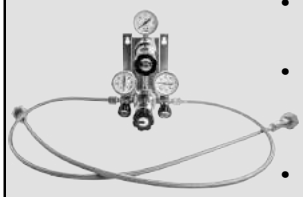	• 1 - Premier changeover regulator • 1 - Premier 2500 Series line regulator • 1 - Stainless Steel mounting Bracket with 4 - holes for 1/4" screws • 2 - Check valves in Stainless Steel or Brass	3000 psig / 206.84 bar *dependent upon configuration*	Cv: 0.08	SAE 360 Brass, Bright Dip SAE 360 Brass, Nickel Plated 6061-T6 Aluminum, Clear Anodized 316 Stainless Steel

MANIFOLDS AND CHANGOVERS
GAS DELIVERY SYSTEMS

SERIES	STANDARD COMPONENTS	MAX INLET PRESSURE	MAX PROCESS FLOW RATE	BODY MATERIAL
M2500 SERIES	• 1 Premier 2500 Series, two stage regulator • 1 Stainless Steel mounting Bracket with 4 holes for 1/4" screws • Check valve(s) in brass or stainless steel	3000 psig / 206.84 bar *dependent upon configuration*	3.5 SLPM	SAE 360 Brass, Bright Dip SAE 360 Brass, Nickel Plated 316 Stainless Steel
M4500 SERIES	• 1 Premier 4500 Series, two stage regulator • 1 Stainless Steel mounting Bracket with 4 holes for 1/4" screws • Check valve(s) in brass or stainless steel	3000 psig / 206.84 bar *dependent upon configuration*	Cv: 0.08	SAE 360 Brass, Bright Dip SAE 360 Brass, Nickel Plated 6061-T6 Aluminum, 316 Stainless Steel

PRESSURE REDUCING REGULATORS

Premier offers a large selection of pressure reducing regulators for use in a wide variety of industries worldwide. We offer pressure reducing regulators in varying: sizes (ranging from 0.7” to larger 8” models), bonnet and body materials (with varying corrosion resistance), pressure ranges, and flow rates. With the flexibility of optional port alignments, port sizes/types, relief and shut off valves, loading styles, elastomers, color anodizing and more, Premier pressure reducing regulators provide maximum compatibility to your unique application. If you do not see a regulator in our standard series that meets your needs, please contact us for a custom design or modification.

PRESSURE REDUCING REGULATORS

2300C Series *Miniature, Single Stage, Gas Cartridge Compatible Pressure Reducing Regulators* **40**

2300N Series *Miniature, Single Stage, Neoprene Diaphragm, Pressure Reducing Regulators* **43**

2300S Series *Miniature, Single Stage, Elgiloy® Diaphragm, Pressure Reducing Regulators* **45**

2310C Series *Gas Cartridge Compatible, Diaphragm Sensed, Stable Set Pressure, Pressure Reducing Regulators* **49**

2310N Series *Stable Set Pressure, Single Stage, Neoprene Diaphragm, Pressure Reducing Regulators* **52**

2310S Series *Stable Set Pressure, Single Stage, Elgiloy® Diaphragm, Pressure Reducing Regulators* **55**

2500 Series *Single Stage, Diaphragm Sensed, Pressure Reducing Regulators* **59**

2500A Series *Absolute Pressure, Single Stage, Diaphragm Sensed, Pressure Reducing Regulators* **64**

2500DL Series *Dome Loaded, Single Stage, Diaphragm Sensed, Pressure Reducing Regulators* **66**

2500DLB Series *Dome Loaded / Bias Spring, Single Stage, Diaphragm Sensed, Pressure Reducing Regulators* **69**

2510 Series *Stable Set Pressure, Single Stage, Diaphragm Sensed, Pressure Reducing Regulators* **72**

2550 Series *Single Stage, Diaphragm Sensed, Pressure Reducing Regulators* **75**

2550A Series *Single Stage, Diaphragm Sensed, Absolute Pressure Pressure Reducing Regulators* **78**

2600 Series *Single Stage, Piston Sensed, Pressure Reducing Regulators* **81**

2610 Series *Stable Set Pressure, Single Stage, Piston Sensed, Pressure Reducing Regulators* **84**

2660 Series *Single Stage, Piston Sensed, Venting Pressure Reducing Regulators* **87**

2700 Series *Compact, Fixed Flow, Pressure Reducing Regulators* **90**

2701 Series *Miniature, Economical, Fixed Flow Pressure Reducing Regulators* **93**

2780 Series *Micro, Piston Sensed, Pressure Reducing Regulators* **100**

2790 Series *Micro, Piston Sensed, Pressure Reducing Manifold Regulators* **102**

PRESSURE REDUCING REGULATORS

2800N Series *High Flow, Neoprene Diaphragm Sensed, Pressure Reducing Regulators* **106**

2800S Series *High Flow, Stainless Steel Diaphragm Sensed, Pressure Reducing Regulators* **109**

2800P Series *High Flow, Piston Sensed, Pressure Reducing Regulators* **112**

2800PDL Series *High Flow, Piston Sensed, Pressure Reducing Regulators* **116**

2860PDL Series *Dome Loaded, High Flow, Piston Sensed, Pressure Reducing Regulators* **119**

2900 Series *Adjustable Flow, Piston Sensed, Pressure Reducing Regulators* **122**

3000 Series *High Pressure, Gas, Piston Sensed, Pressure Reducing Regulators* **124**

3000AL Series *High Pressure, Air Loaded, Pressure Reducing Regulators* **128**

3000DL Series *High Pressure, Dome Loaded, Pressure Reducing Regulators* **131**

3016 Series *High Pressure, High Flow, Piston Sensed Pressure Reducing Regulators* **134**

3016AL Series *Air Loaded, High Pressure, High Flow, Pressure Reducing Regulators* **139**

3016DL Series *Air Loaded, High Pressure, High Flow, Pressure Reducing Regulators* **142**

3020 Series *High Pressure, Pressure Reducing Regulators, Low-Torque Ball Bearing Hand Knob* **145**

3023 Series *High Pressure, 15K PSIG, Pressure Reducing Regulators* **149**

3023AL Series *Air Loaded, High Pressure, 15K PSIG, Pressure Reducing Regulators* **152**

3023DL Series *Dome Loaded, High Pressure, 15K PSIG, Pressure Reducing Regulators* **155**

3025 Series *High Pressure, 20K PSIG, Pressure Reducing Regulators* **158**

PRESSURE REDUCING REGULATORS

3025AL Series *Air Loaded, High Pressure, 20K PSIG, Pressure Reducing Regulators* **161**

3025HPL Series *High Pressure Loaded, Piston Sensed, Pressure Reducing Regulators* **164**

3400 Series *High Pressure, High Sensitivity, Diaphragm Sensed, Pressure Reducing Regulators* **167**

3500 Series *Miniature Pneumatic, High Pressure Pressure Reducing Regulators* **170**

3500AL Series *Air Loaded, Miniature Pneumatic, High Pressure, Pressure Reducing Regulators* **173**

3500DL Series *Dome Loaded, Miniature Pneumatic, High Pressure, Pressure Reducing Regulators* **176**

3560 Series *Miniature Pneumatic, Captured Venting, High Pressure, Pressure Reducing Regulators* **179**

4050 Series *Two Stage, High Sensitivity Pressure Reducing Regulators.* **182**

4300N Series *Two Stage, Miniature, Pressure Reducing Regulators.* **185**

4300S Series *Two Stage, Miniature, Pressure Reducing Regulators.* **187**

4500 Series *Two Stage, Diaphragm Sensed, Pressure Reducing Regulators.* **189**

4600 Series *Two Stage, High Pressure, Piston Sensed, Pressure Reducing Regulators.* **192**

4700 Series *Miniature, Two Stage, Pressure Reducing Regulators.* **194**

4700 Series Live-well *Livewell, Oxygen Injection Regulators.* **196**

5000 Series *High Flow, Pressure Reducing Regulators.* **198**

5033DL Series *Dome Loaded, High Flow, Cv 3.3 Pressure Reducing Regulators.* **200**

PRESSURE REDUCING REGULATORS

5050 Series *High Flow, Cv 5.0, diaphragm sensed Pressure Reducing Regulators.* **203**

5050DL Series *High Flow, dome loaded, diaphragm sensed Pressure Reducing Regulators.* **206**

5050DLB Series *High Flow, dome loaded / bias spring, diaphragm sensed Pressure Reducing Regulators.* **209**

5060DL Series *Dome Loaded, High Flow, Cv 6.0 Pressure Reducing Regulators.* **212**

6000 Series *Hydraulic, High Pressure, Pressure Reducing Regulators* **215**

6000AL Series *Air Loaded, Hydraulic, High Pressure, Pressure Reducing Regulators* **218**

6000DL Series *Dome Loaded, Hydraulic, High Pressure, Pressure Reducing Regulators* **221**

6000FL Series *Flange Mounted, Hydraulic, High Pressure, Pressure Reducing Regulators* **224**

6020 Series *Hydraulic, High Pressure, Pressure Reducing Regulators Low-torque Hand Knob.* **227**

6023 Series *Hydraulic, High Pressure, 15000 PSIG MAX Pressure Reducing Regulators* **230**

6023AL Series *Air Loaded, Hydraulic, High Pressure, 15000 PSIG MAX Pressure Reducing Regulators* **233**

6023DL Series *Dome Loaded, Hydraulic, High Pressure, 15000 PSIG MAX Pressure Reducing Regulators* **236**

6025 Series *Hydraulic, High Pressure, 20000 PSIG MAX Pressure Reducing Regulators* **239**

6025AL Series *Air Loaded, Hydraulic, High Pressure, 20000 PSIG MAX Pressure Reducing Regulators* **242**

6250 Series *Hydraulic, Diaphragm Sensed Pressure Reducing Regulators* **245**

PRESSURE REDUCING REGULATORS

6250DLB Series *Hydraulic, Dome Loaded / Bias Spring, Diaphragm Sensed Pressure Reducing Regulators* **248**

6500 Series *Miniature, Hydraulic, High Pressure Pressure Reducing Regulators*. **251**

6500AL Series *Air Loaded, Miniature, Hydraulic, High Pressure Pressure Reducing Regulators*. **254**

6500DL Series *Dome Loaded, Miniature, Hydraulic, High Pressure Pressure Reducing Regulators*. **257**

6560 Series *Miniature, High Pressure, Hydraulic Pressure Reducing Regulators*. **260**

R0.1 Series *Single Stage, Piston Sensed, Roughing Regulator* **263**

DIAPHRAGM SENSED GAS CARTRIDGE COMPATIBLE

Pressure Reducing Regulators

2300C SERIES

PREMIER INDUSTRIES

1590 99th Ln NE,
Minneapolis, MN 55449
763-786-4020

MADE IN THE USA

Minneapolis, MN

DESCRIPTION

The 2300C Series regulators are compact, single stage, diaphragm sensed regulators, designed for use with disposable gas cartridges. The 2300C Series features a 303 stainless steel piercing tip, integrated relief valve, and a selection of adapters for various threaded and unthreaded disposable gas cartridges. These regulators are designed to control pressures up to 3500 PSIG *(241.3 bar)*, with a flow capacity (Cv) of 0.04. The 2300C is lightweight, economical, and reliable for all your disposable gas cylinder needs.

The Premier 2300C is suitable for common cartridge gases: carbon dioxide, argon, nitrogen gas, helium, air, nitrous oxide (brass option).

FEATURES

- Specifically designed for use with disposable gas cartridges
- Robust stainless steel piercing tip
- Integrated relief valve
- Compact size
- Very competitive pricing
- Machined bar stock body, and bonnet eliminates porosity found in castings
- Adjusting knob with locking-nut

The Premier 2300C Series pressure reducing regulator's design is remarkably flexible. Contact Premier Industries for a custom 2300C Series regulator to meet your exact needs.

2300C SERIES

DIAPHRAGM SENSED GAS CARTRIDGE COMPATIBLE

Pressure Reducing Regulators

SPECIFICATIONS

- **MAX INLET PRESSURE:** 3500 PSIG *(241.3 bar)*
- **OUTLET PRESSURE / RELIEF PRESSURE:**
  - 0 - 15 PSIG *(0-1.03 bar)* / 60 PSIG *(4.14 bar)*
  - 0 - 30 PSIG *(0-2.07 bar)* / 60 PSIG *(4.14 bar)*
  - 0 - 60 PSIG *(0-4.14 bar)* / 90 PSIG *(6.21 bar)*
  - *Consult factory for other options*
- **FLOW CAPCITY (Cv):** 0.04

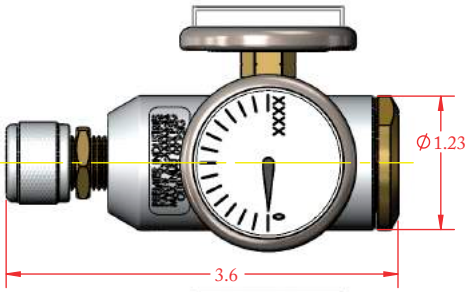

MATERIALS OF CONSTRUCTION

- **BODY & BONNET OPTIONS:**
  - 6061-T6 Aluminum, Clear Anodize
  - SAE 360 Brass, Bright Dip
- **INLET ADAPTER:**
  - SAE 360 Brass, Bright Dip *(for threaded)*
  - 303 Stainless Steel and Aluminum, Anodized *(for cup adapter)*
- **PIERCING TIP:** 303 Stainless Steel
- **DIAPHRAGM:** Fabric reinforced neoprene
- **O-RING MATERIAL:** Nitrile
- **MAIN VALVE HOUSING:** Brass
- **MAIN VALVE SPRING:** Stainless Steel
- **MAIN VALVE SEAL:** Nitrile
- **CARTRIDGE GASKET:** Polyurethane
- **RELIEF VALVE:** Stainless steel
- **OTHER NON-WETTED COMPONENTS:**
  - brass/aluminum/spring steel

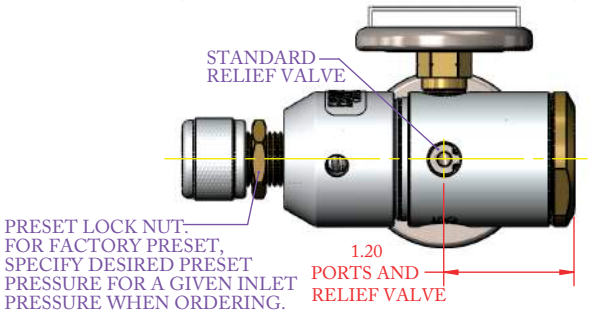

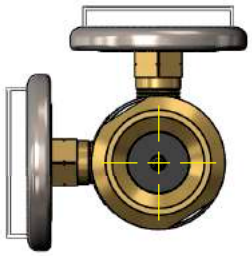

PORTING *(1, 2, and 3 port options)*

- **STANDARD INLET:**
  - CARTRIDGE ADAPTER WITH PIERCING TIP
    - 3/8-24 UNF
    - 7/16-20 UNF
    - 1/2-20 UNF
    - 5/8-18 UNF
    - 5/8-18 UNF- extra long
    - cup adapter for 16g CO_2 unthreaded cartridges
- **OTHER PORTS:**
  - 1/8-27 FNPT

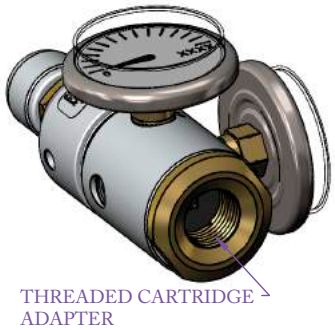

(Part number shown above: 50-12607 - Standard design)

OPTIONS

- Anodized colors for aluminum bodies and bonnets
- Private label

DIAPHRAGM SENSED GAS CARTRIDGE COMPATIBLE

Pressure Reducing Regulators

2300C SERIES

PART #	-	1	2	-	3	4	-	5
50-12607	-			-			-	

1	BODY & BONNET MATERIAL *& FINISH*
1	6061-T6 Aluminum *Clear Anodize*
2	SAE 360 Brass *Bright Dip*
2	**INLET CARTRIDGE ADAPTER**
1	3/8-24 UNF
2	7/16-20 UNF
3	1/2-20 UNF
4	5/8-18 UNF
5	5/8-18 UNF - extra long
6	Cup adapter for 16g CO_2 unthreaded cartridges
3	**OUTLET PRESSURE / RELIEF PRESSURE**
1	0 - 15 PSIG *(0-1.03 bar)* / 60 PSIG *(4.14 bar)*
2	0 - 30 PSIG *(0-2.07 bar)* / 60 PSIG *(4.14 bar)*
3	0 - 60 PSIG *(0-4.14 bar)* / 90 PSIG *(6.21 bar)*

4	PORTING
1	"S*" porting
2	"H*" porting
3	"A" porting
4	"A*" porting
5	**GAUGES**
1	No gauges
2	Include gauges

Gauges not available on "S" porting*
Inlet gauge only on "H" porting option*
Inlet & outlet gauge on "A" porting option
Outlet gauge only on "A" porting option*

Suitable for use with carbon dioxide, argon, nitrogen gas, helium, air, and nitrous oxide (brass option).
Carefully review construction materials and contact factory for use with other gases or mixtures. Contact factory if cartridge is non-standard.

Contact factory for material certifications. Fees may apply.

COMPACT, LIGHT WEIGHT SINGLE STAGE, DIAPHRAGM SENSED

Pressure Reducing Regulators

2300N SERIES

PREMIER INDUSTRIES

1590 99th Ln NE,
Minneapolis, MN 55449
763-786-4020

MADE IN THE USA

Minneapolis, MN

DESCRIPTION

Premier 2300N Series regulators are compact, single staged, diaphragm sensed, general purpose regulators. 2300N Series regulators feature a neoprene or Viton® diaphragm and are designed for inlet pressures up to 500 PSIG *(34.5 bar)*. They can be constructed with an integral shut off valve, and are available in a wide range of materials for the regulation of a broad range of media *(as compatible with the configured materials of construction)*. Typical media may include: propane, butane, MAPP gas, calibration gases, and refrigerants among others. These compact, general purpose, cylinder regulators offer reliable performance in a compact, lightweight, and economical design.

FEATURES

- Compact size
- Light weight (approx. 5 oz)
- Neoprene or Viton® diaphragm
- Optional integrated shut off/metering valve
- Economical pricing
- Cv: 0.04 *(300 PSIG / 20.7 bar inlet)*
- Machined bar stock body, and bonnet eliminates porosity found in castings
- Variety of porting options

The Premier 2300N Series pressure reducing regulator's design is remarkably flexible. Contact Premier Industries for a custom 2300N Series regulator to meet your exact needs.

2300N SERIES

COMPACT, LIGHT WEIGHT
SINGLE STAGE, DIAPHRAGM SENSED
Pressure Reducing Regulators

SPECIFICATIONS

- **MAX INLET PRESSURE:** 500 PSIG *(34.5 bar)*
  (dependent upon configuration)
- **OUTLET PRESSURE RANGES:**
  - 0 - 15 PSIG *(0-1.03 bar)*
  - 0 - 30 PSIG *(0-2.07 bar)*
  - 0 - 60 PSIG *(0-4.14 bar)*
- **FLOW (Cv):** .04 *(300 PSIG / 20.7 bar inlet)*
- **LEAK RATE:** Bubble Tight
- **OPERATING TEMPERATURE:** -40° F to 165° F
- **WEIGHT:** Approx. 5 oz.

MATERIALS OF CONSTRUCTION

- **BODY OPTIONS:**
  - 6061-T6 Aluminum, Clear Anodized
  - SAE 360 Brass
- **BONNET OPTIONS:**
  - 6061-T6 Aluminum, Clear Anodized
  - SAE 360 Brass
  - Brass, Electroless Nickel Plated
- **DIAPHRAGM:** Neoprene, (Viton® optional)
- **VALVE SEAT:** Neoprene
- **SEALS:**
  - PTFE

PORTING

- **INLET PORTING:**
  - 1/8 FNPT
  - 1/4 FNPT
  - CGA600 (bottom port only)
  - All CGA Connections Available:
    – CGA 165, 180, 320, 510, 580, 600, etc.
- **OUTLET PORTING:**
  - 1/8 FNPT

OPTIONS

- Gauges (1/8 FNPT Porting): inlet, outlet, or both
- Inlet shut off/metering valve
- Relief valve
- Seat and sealing materials
- Anodized colors for aluminum bodies and bonnets
- Private label

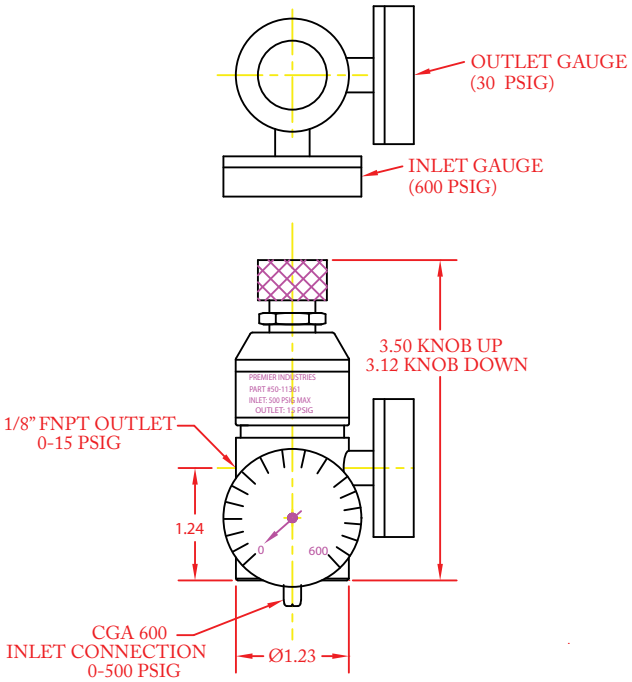

(part number shown above: 50-11361)

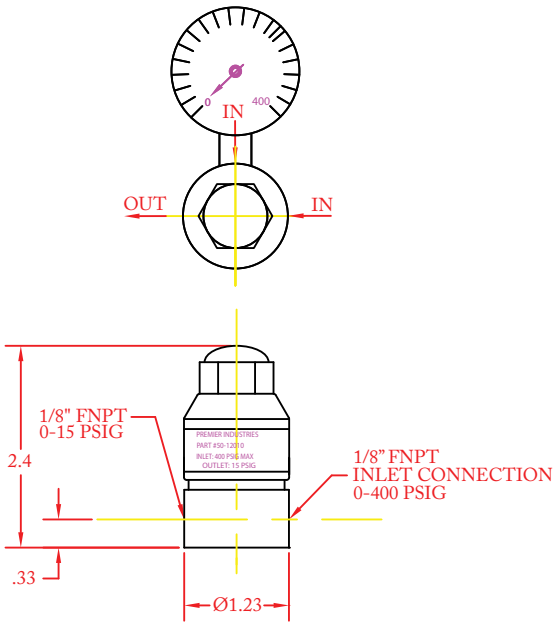

(part number shown above: 50-12010)

Viton® is a registered trademark of E.I.duPont de Nemours and Company
Contact factory for material certifications. Fees may apply.

COMPACT, LIGHT WEIGHT SINGLE STAGE, DIAPHRAGM SENSED

Pressure Reducing Regulators

2300S SERIES

PREMIER INDUSTRIES

1590 99th Ln NE,
Minneapolis, MN 55449
763-786-4020

MADE IN THE USA

Minneapolis, MN

DESCRIPTION

Premier 2300S Series regulators are compact, single stage, diaphragm sensed, elastomer free, general purpose regulators. 2300S Series regulators feature an Elgiloy® diaphragm and are designed for inlet pressures up to 3000 PSIG *(206.8 bar)* and outlet pressures up to 150 PSIG *(10.34 bar)*. These compact, general purpose, cylinder regulators offer reliable performance in a compact, lightweight design.

FEATURES

- Compact & light weight
- 3000 PSIG / *206.8 bar* inlet
- Elgiloy® diaphragm
- Economical pricing
- Elastomer free for low outgassing and superior chemical compatibility
- Cv: 0.05 max
- Machined bar stock body, and bonnet eliminates porosity found in castings

The Premier 2300S Series pressure reducing regulator's design is remarkably flexible.
Contact Premier Industries for a custom 2300S Series regulator to meet your exact needs.
Elgiloy® is a registered trademark of Elgiloy Specilaty Metals Division, Combined Metals of Chicago L.L.C

2300S SERIES

COMPACT, LIGHT WEIGHT SINGLE STAGE, DIAPHRAGM SENSED

Pressure Reducing Regulators

SPECIFICATIONS

- **MAX INLET PRESSURE:** 3000 PSIG *(206.8 bar)*
- **OUTLET PRESSURE RANGES:**
  - 0 - 15 PSIG *(0-1.03 bar)*
  - 0 - 30 PSIG *(0-2.07 bar)*
  - 0 - 50 PSIG *(0-3.45 bar)*
  - 0 - 75 PSIG *(0-5.17 bar)*
  - 0 - 100 PSIG *(0-6.89 bar)*
  - 0 - 150 PSIG *(0-10.34 bar)*
- **FLOW (Cv):** 0.05

MATERIALS OF CONSTRUCTION

- **BODY/BONNET OPTIONS:**
  - SAE 360 Brass, Nickel Plated
  - 6061-T6 Aluminum, Nickel Plated
  - 303 Stainless Steel
  - 316 Stainless Steel
- **BONNET OPTIONS:**
  - SAE 360 Brass, Nickel Plated *(standard)*
  - 316 Stainless Steel
  - 303 Stainless Steel
- **DIAPHRAGM:** Elgiloy®
- **VALVE SEAT:** PTFE
- **MAIN VALVE / MAIN VALVE RETAINER:**
  - 316 Stainless Steel *(for 316 Stainless steel body option)*
  - 303 Stainless Steel *(for all other body options)*
- **SEALS:** PTFE
- **MAIN VALVE SPRING:**
  - 316 Stainless Steel

PORTING *(2, 3, and 4 port options)*

- **STANDARD INLET:**
  - 1/8 FNPT *(1 or 2)*
- **OUTLET PORTING:**
  - 1/8 FNPT *(1 or 2)*

OPTIONS

- **GAUGES** (1/8 FNPT Porting):
  - Stainless steel wetted components *(for stainless steel body option)*
  - Brass nickel plated wetted components *(for aluminum and brass body options)*
- **INTEGRATED RELIEF VALVE** *(Optional)*:
  - 316 Stainless Steel valve w/ Viton® seat *(for 316 Stainless steel body option)*
  - 303 Stainless Steel valve w/ Viton® seat *(for all other body options)*
- Preset outlet pressure
- Private label

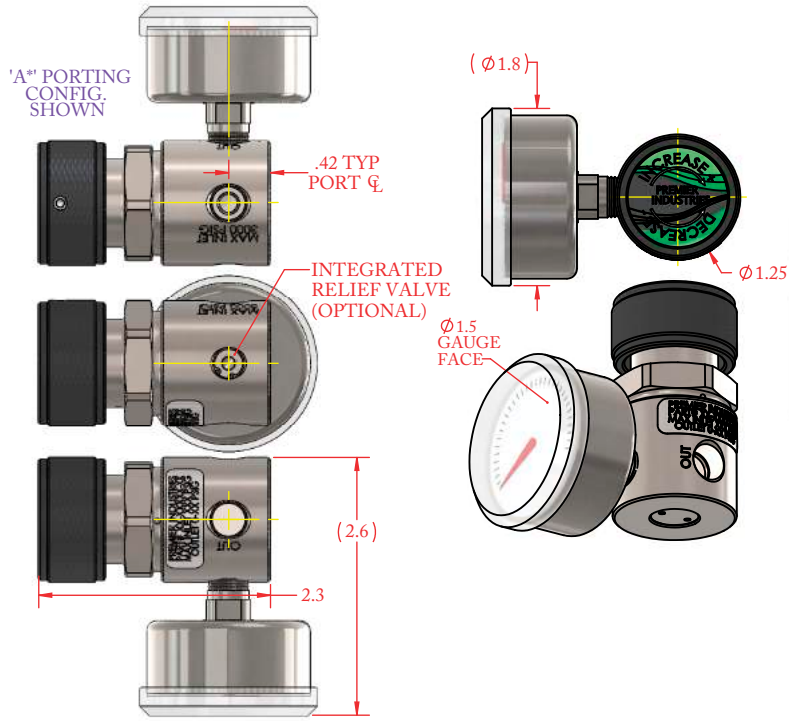

(Part number: 50-12771 shown above)

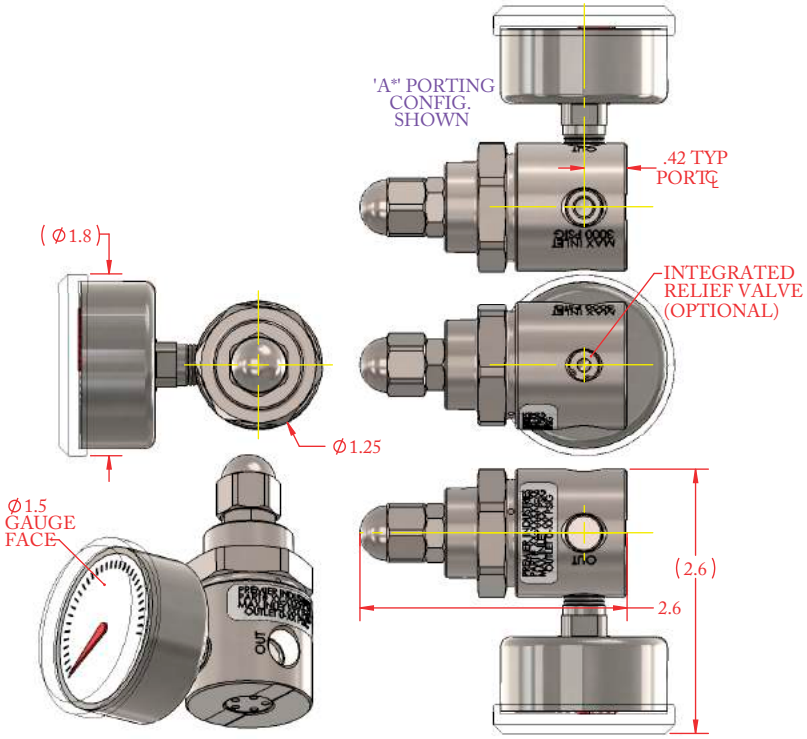

(Part number: 50-12908 shown above)

Viton® is a registered trademark of E.I.duPont de Nemours and Company
Elgiloy® is a registered trademark of Elgiloy Specilaty Metals Division, Combin

COMPACT, LIGHT WEIGHT SINGLE STAGE, DIAPHRAGM SENSED

Pressure Reducing Regulators

2300S SERIES

PART #	-	1	2	-	3	-	4	5
50-12771	-			-		-		

1	BODY/BONNET MATERIALS *(MAX. INLET PRESSURE)*
1	SAE 360 Brass, Nickel Plated *(body & bonnet)*
2	6061-T6 Aluminum, Nickel Plated *(body)* SAE 360 Brass, Nickel Plated *(bonnet)*
3	303 Stainless Steel, cleaned per spec #515 *(body)* SAE 360 Brass, Nickel Plated *(bonnet)*
4	303 Stainless Steel, cleaned per spec #515 *(body)* 303 Stainless Steel, cleaned per spec #515 *(bonnet)*
5	316 Stainless Steel, cleaned per spec #515 *(body)* SAE 360 Brass, Nickel Plated *(bonnet)*
6	316 Stainless Steel, cleaned per spec #515 *(body)* 303 Stainless Steel, cleaned per spec #515 *(bonnet)*
7	316 Stainless Steel, cleaned per spec #515 *(body)* 316 Stainless Steel, cleaned per spec #515 *(bonnet)*

2	BODY PORTING	
S	S porting, *2 port*	*(WITH OPTIONAL RELIEF VALVE)*
A	A porting, *3 port*	*(WITH OPTIONAL RELIEF VALVE)*
B	B porting, *3 port*	*(WITH OPTIONAL RELIEF VALVE)*
G	G porting, *3 port*	*(WITH OPTIONAL RELIEF VALVE)*
H	H porting, *3 port*	*(WITH OPTIONAL RELIEF VALVE)*
L	L porting, *4 port*	*RELIEF VALVE NOT AVAILABLE ON 'L' PORTING CONFIGURATION*

3	OUTLET PRESSURE	*RELIEF PRESSURE IF APPLICABLE*
1	0-15 psig *(0-1.03 bar)*	60 psig *(4.14 bar)*
2	0-30 psig *(0-2.07 bar)*	60 psig *(4.14 bar)*
3	0-50 psig *(0-3.45 bar)*	90 psig *(6.21 bar)*
4	0-75 psig *(0-5.17 bar)*	90 psig *(6.21 bar)*
5	0-100 psig *(0-6.89 bar)*	*relief valve not available*
6	0-150 psig *(0-10.34 bar)*	*relief valve not available*

4	GAUGES
0	None
1	Include gauges

Gauges not available for 'S' porting configuration,
Outlet gauge only on 'A' and 'B' configurations,
Inlet gauge only on 'G' and 'H' porting configurations,
Both inlet & outlet gauge on 'L' porting configuration

5	INTEGRATED RELIEF VALVE *OPTIONAL*
0	No relief valve
1	Include relief valve

Relief valve not available on 'L' porting configuration.
Relief valve not available if max outlet > 75 psig.

Contact factory for material certifications. Fees may apply.

2300S SERIES

COMPACT, LIGHT WEIGHT SINGLE STAGE, DIAPHRAGM SENSED

Pressure Reducing Regulators

REGULATORS, VALVES, AND TORCHES
PREMIER INDUSTRIES
MINNEAPOLIS • MINNESOTA • USA

PRESET OUTLET PRESSURE

PART #	-	1	2	-	3	4	-	PRESET OUTLET
50-12908	-			-			-	

1	BODY/BONNET MATERIALS *(MAX. INLET PRESSURE)*
1	SAE 360 Brass, Nickel Plated *(body & bonnet)*
2	6061-T6 Aluminum, Nickel Plated *(body)* SAE 360 Brass, Nickel Plated *(bonnet)*
3	303 Stainless Steel, cleaned per spec #515 *(body)* SAE 360 Brass, Nickel Plated *(bonnet)*
4	303 Stainless Steel, cleaned per spec #515 *(body)* 303 Stainless Steel, cleaned per spec #515 *(bonnet)*
5	316 Stainless Steel, cleaned per spec #515 *(body)* SAE 360 Brass, Nickel Plated *(bonnet)*
6	316 Stainless Steel, cleaned per spec #515 *(body)* 303 Stainless Steel, cleaned per spec #515 *(bonnet)*
7	316 Stainless Steel, cleaned per spec #515 *(body)* 316 Stainless Steel, cleaned per spec #515 *(bonnet)*

2	BODY PORTING	
S	S porting, *2 port*	*(WITH OPTIONAL RELIEF VALVE)*
A	A porting, *3 port*	*(WITH OPTIONAL RELIEF VALVE)*
B	B porting, *3 port*	*(WITH OPTIONAL RELIEF VALVE)*
G	G porting, *3 port*	*(WITH OPTIONAL RELIEF VALVE)*
H	H porting, *3 port*	*(WITH OPTIONAL RELIEF VALVE)*
L	L porting, *4 port*	*RELIEF VALVE NOT AVAILABLE ON 'L' PORTING CONFIGURATION*

3	GAUGES
0	None
1	Include gauges

Gauges not available for 'S' porting configuration,
Outlet gauge only on 'A' and 'B' configurations,
Inlet gauge only on 'G' and 'H' porting configurations,
Both inlet & outlet gauge on 'L' porting configuration

4	INTEGRATED RELIEF VALVE *OPTIONAL*
0	No relief valve
1	Include relief valve

Relief valve not available on 'L' porting configuration.
Relief valve not available if max outlet > 75 psig.

PRESET OUTLET PRESSURE (XXX)

XXX	Specify outlet pressure preset 'XXX' in psig. Minimum 10 psig ('010'). Maximum 150 psig ('150')

IF REGULATOR INCLUDES A RELIEF VALVE, RELIEF SETTINGS ARE AS FOLLOWS:
'XXX' ≤ 30 PSIG OUT / 60 PSIG RELIEF SETTING
30 < 'XXX' ≤ 75 PSIG OUT / 90 PSIG RELIEF SETTING

OUTLET SET AT 2000 PSIG INLET
(UNLESS NOTED OTHERWISE ON WORK ORDER.)

Contact factory for material certifications. Fees may apply.

DIAPHRAGM SENSED GAS CARTRIDGE COMPATIBLE

Pressure Reducing Regulators

2310C SERIES

PREMIER INDUSTRIES

1590 99th Ln NE,
Minneapolis, MN 55449
763-786-4020

MADE IN THE USA

Minneapolis, MN

DESCRIPTION

The 2310C Series regulators are compact, single stage, diaphragm sensed regulators, designed for use with disposable gas cartridges. The 2310C Series features a 303 stainless steel piercing tip, integrated relief valve, and a selection of adapters for various threaded and unthreaded disposable gas cartidges. These regulators are designed to control pressures up to 3000 PSIG *(206.8 bar)*, with a flow capacity (Cv) of 0.025. The 2310C is lightweight, economical, and reliable for all your disposable gas cylinder needs.

The Premier 2310C Series pressure reducing regulators are part of a new family of Stable Set Pressure (SSP) regulators at Premier Industries that feature a significantly reduced supply pressure effect. The result: stable delivery pressure as the compressed gas source drains.

FEATURES

- Reduced supply pressure effect when compared with typical single stage regulators
- Specifically designed for use with disposable gas cartridges
- Robust stainless steel piercing tip
- Integrated relief valve
- Compact size
- Very competitive pricing
- Machined bar stock body, and bonnet eliminates porosity found in castings
- Adjusting knob with locking-nut

The Premier 2310C Series pressure reducing regulator's design is remarkably flexible. Contact Premier Industries for a custom 2310C Series regulator to meet your exact needs.

2310C SERIES

DIAPHRAGM SENSED GAS CARTRIDGE COMPATIBLE

Pressure Reducing Regulators

SPECIFICATIONS

- **MAX INLET PRESSURE:** 3000 PSIG *(206.8 bar)*
- **OUTLET PRESSURE / RELIEF PRESSURE:**
  - 0 - 15 PSIG *(0-1.03 bar)* / 40 PSIG *(2.76 bar)*
  - 0 - 30 PSIG *(0-2.07 bar)* / 60 PSIG *(4.14 bar)*
  - 0 - 60 PSIG *(0-4.14 bar)* / 90 PSIG *(6.21 bar)*
  - *Consult factory for other options*
- **FLOW CAPCITY (Cv):** 0.025

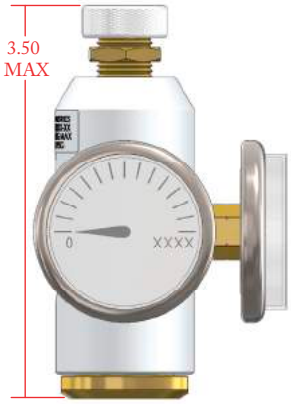

MATERIALS OF CONSTRUCTION

- **BODY & BONNET OPTIONS:**
  - 6061-T6 Aluminum, Clear Anodize
  - SAE 360 Brass, Bright Dip
  - *Consult factory for other options*
- **PIERCING TIP:** 303 Stainless Steel
- **DIAPHRAGM & O-RING MATERIAL:**
  - Neoprene
  - Viton-A®
  - *Consult factory for other options*
- **VALVE SEAT:** PFA
  (other options available off the shelf)
- **SEAL BACKUP:**
  - PTFE
- **INLET CARTRIDGE ADAPTER:**
  - SAE 360 Brass, Bright Dip
    - 3/8-24 FNPT
    - 7/16-20 FNPT
    - 1/2-20 FNPT
    - 5/8-18 FNPT

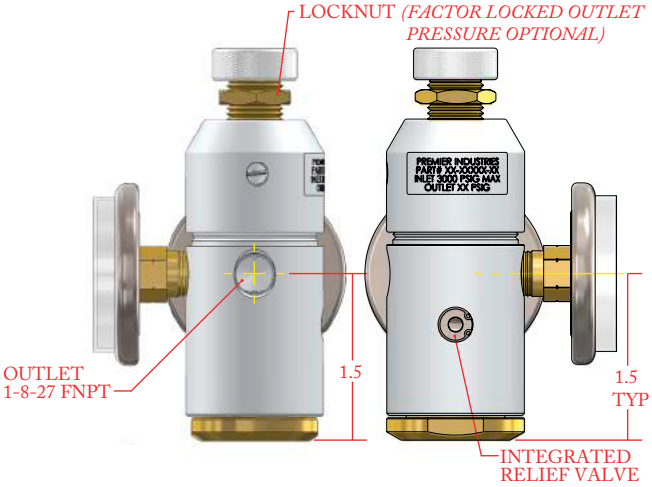

PORTING *(3 and 4 port options)*

- **STANDARD INLET:**
  - PIERCING TIP FOR:
    - 3/8-24, 7/16-20, 1/2-20, 5/8-18 threaded cartridges
    - 16g CO_2 unthreaded cartridges
- **OUTLET PORTING:**
  - 1/8-27 FNPT

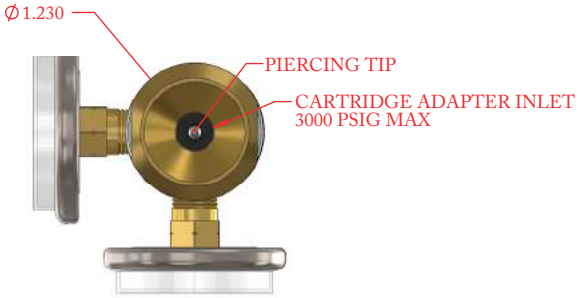

(Part number shown above: 50-12305 - Standard design)

OPTIONS

- Inlet Gauge *(Standard)*
  (brass socket, stainless steel case)
- Preset outlet pressure with tamper resistant acorn nut *(covering the adjusting screw) P/N: 50-12179*
- Anodized colors for aluminum bodies and bonnets
- Private label

Viton-A® is a registered trademark of E.I.duPont de Nemours and Company

DIAPHRAGM SENSED GAS CARTRIDGE COMPATIBLE

Pressure Reducing Regulators

2310C SERIES

PART #	-	1	2	3	4	5	-	6 7
50-12305	-						-	

1	BODY & BONNET MATERIAL *& FINISH*
1	6061-T6 Aluminum *Clear Anodize*
2	SAE 360 Brass *Bright Dip*
2	**INLET CARTRIDGE ADAPTER**
1	3/8-24 FNPT
2	7/16-20 FNPT
3	1/2-20 FNPT
4	5/8-18 FNPT
3	**OUTLET PRESSURE / RELIEF PRESSURE**
1	0 - 15 PSIG *(0-1.03 bar)* / 40 PSIG *(2.76 bar)*
2	0 - 30 PSIG *(0-2.07 bar)* / 60 PSIG *(4.14 bar)*
3	0 - 60 PSIG *(0-4.14 bar)* / 90 PSIG *(6.21 bar)*

4	DIAPHRAGM & O-RING MATERIAL
1	Neoprene
2	Viton-A®
5	**GAUGES**
1	Inlet gauge (no outlet gauge port)
2	Inlet & outlet gauge
3	None (inlet port plugged, no outlet gauge port)
4	Outlet gauge (inlet port plugged)
6 7	**FACTORY LOCKED OUTLET PRESSURE**
Blank	loose / unlocked
X X	Locked at XX psig outlet pressure. *(e.g. 40 is locked at 40 psig out)*

Viton-A® is a registered trademark of E.I.duPont de Nemours and Company
Contact factory for material certifications. Fees may apply.

DIAPHRAGM SENSED STABLE SET PRESSURE

Pressure Reducing Regulator

2310N SERIES

PREMIER INDUSTRIES

1590 99th Ln NE,
Minneapolis, MN 55449
763-786-4020

MADE IN THE USA

Minneapolis, MN

DESCRIPTION

Premier 2310N Series pressure reducing regulators are part of a new family of Stable Set Pressure (SSP) regulators from Premier Industries. The 2310N is a compact, diaphragm sensed, single stage regulator with new technology that enables a significantly reduced decaying inlet characteristic *(supply pressure effect)* when compared to typical single stage regulator designs. The result: increased stability in delivery pressure, in the compact design of a single stage. The Premier 2310N is fitted with a neoprene diaphragm, allowing for low droop in dynamic operation. The regulator features a max inlet of 3000 PSIG *(206.8 bar)*.

FEATURES

- Reduced decaying inlet characteristic *(supply pressure effect)* in a single stage design
- Compact & light-weight
- Economical pricing
- Flow (Cv) 0.025
- Neoprene diaphragm
- 3000 PSIG *(206.8 bar)* max inlet pressure
- Machined bar stock body, and bonnet eliminates porosity found in castings
- Adjusting knob with locking-nut

The Premier 2310N Series pressure reducing regulator's design is remarkably flexible. Contact Premier Industries for a custom 2310N Series regulator to meet your exact needs.

2310N SERIES

DIAPHRAGM SENSED STABLE SET PRESSURE

Pressure Reducing Regulator

SPECIFICATIONS

- **MAX INLET PRESSURE:** 3000 PSIG *(206.8 bar)*
- **OUTLET PRESSURE RANGES:**
  - 0 - 20 PSIG *(0-1.38 bar)*
- **FLOW (Cv):** 0.025

MATERIALS OF CONSTRUCTION

- **BODY OPTIONS:**
  - 6061-T6 Aluminum, Clear Anodize
  - *Consult factory for other options*
- **BONNET OPTIONS:**
  - 6061-T6 Aluminum, Clear Anodize
  - *Consult factory for other options*
- **DIAPHRAGM:** Neoprene
- **VALVE SEAT:** PFA
- **SEALS:**
  - Neoprene

PORTING *(2, 3, and 4 port options)*

- **STANDARD INLET:**
  - 1/8-27 FNPT
- **OUTLET PORTING:**
  - 1/8-27 FNPT

OPTIONS

- Anodized colors for aluminum bodies and bonnets
- Private label

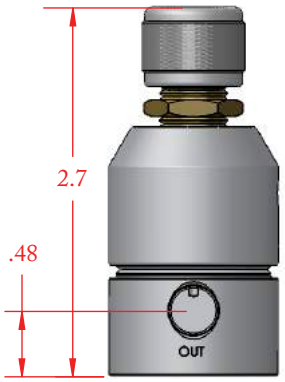

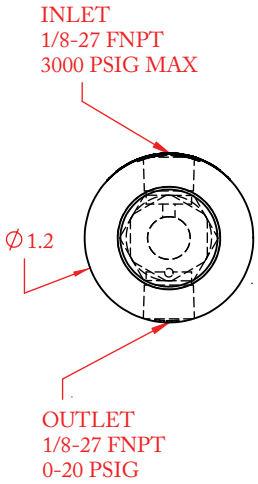

(part number: 50-12143 shown above)

DIAPHRAGM SENSED STABLE SET PRESSURE

Pressure Reducing Regulator

2310N SERIES

PART #	-	1	2	3	-	4	5
50-12143	-				-		

1	BODY MATERIALS *(MAX. INLET PRESSURE)*
1	6061-T6 Aluminum, Clear Anodize
2	**PORTING CONFIGURATION**
1	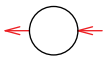 'S' porting
3	**OUTLET PRESSURE**
1	0-20 psig / *0-1.38 bar*

4	SEAL/DIAPHRAGM MATERIAL
1	Neoprene
5	**GAUGES**
1	None

Gauges not available on 2 port configuration

Contact factory for material certifications. Fees may apply.

DIAPHRAGM SENSED STABLE SET PRESSURE

Pressure Reducing Regulator

2310S SERIES

PREMIER INDUSTRIES

1590 99th Ln NE,
Minneapolis, MN 55449
763-786-4020

MADE IN THE USA

Minneapolis, MN

DESCRIPTION

The Premier 2310S is a diaphragm sensed, single stage regulator capable of significantly reducing the decaying inlet characteristic (supply pressure effect) that is typically characteristic of single stage regulator designs. The result: stable delivery pressures in the compact design of a single stage. An elastomer free design is available with an Elgiloy® diaphragm, PTFE seals, and a small internal volume for compatibility with high purity applications; the elgiloy diaphragm is conducive to high cycle applications and wide temperature swings. The Premier 2310S Series regulator is designed for inlet pressures up to 3000 PSIG *(206.8 bar)*.

FEATURES

- Reduced decaying inlet characteristic *(supply pressure effect)* in a single stage design
- Reduced contamination and outgassing with Elgiloy® diaphragm, stainless body, & stainless wetted parts
- Compact size
- Elastomer free option available
- Very competitive pricing
- Machined bar stock body, and bonnet eliminates porosity found in castings
- Elgiloy® diaphragm conducive to high cycle applications and wide temperature swings
- 2 port and 4 port designs

The Premier 2310S Series pressure reducing regulator's design is remarkably flexible. Contact Premier Industries for a custom 2310S Series regulator to meet your exact needs.

2310S SERIES

DIAPHRAGM SENSED STABLE SET PRESSURE

Pressure Reducing Regulator

SPECIFICATIONS

- **MAX INLET PRESSURE:** 3000 PSIG *(206.8 bar)*
- **OUTLET PRESSURE RANGES:**
  - 0 - 15 PSIG *(0-1.03 bar)*
  - 0 - 30 PSIG *(0-2.07 bar)*
  - 0 - 50 PSIG *(0-3.45 bar)*
  - 0 - 75 PSIG *(0-5.17 bar)*
  - 0 - 100 PSIG *(0-6.89 bar)*
  - 0 - 150 PSIG *(0-10.34 bar)*
- **WEIGHT:** Approx. 5 oz.
- **FLOW (Cv):** 0.05

MATERIALS OF CONSTRUCTION

- **BODY OPTIONS:**
  - SAE 360 Brass, Nickel Plated
  - 6061-T6 Aluminum, Nickel Plated
  - 303 Stainless Steel
  - 316 Stainless Steel
- **BONNET OPTIONS:**
  - SAE 360 Brass, Nickel Plated *(standard)*
  - 303 Stainless Steel
  - 316 Stainless Steel
- **DIAPHRAGM:** Elgiloy®
- **MAIN VALVE & MAIN VALVE RETAINER:**
  - 316 Stainless Steel *(316 stainless steel body option)*
  - 303 Stainless Steel *(all other body options)*
- **BONNET OPTIONS:**
  - SAE 360 Brass, Nickel Plated *(standard)*
  - 303 Stainless Steel
  - 316 Stainless Steel
- **SEAT & OTHER SEALS:** PTFE
- **BALANCED SEAL RETAINER:** 316 Stainless Steel
- **BALANCED SEAL:** Viton-A®
- **BALANCED SEAL BACKUP:** PTFE
- **OPTIONAL INTEGRAL RELIEF VALVE:**
  - 316 Stainless Steel *(316 stainless steel body), Viton-A® valve seat*
  - 303 Stainless Steel *(all other body options), Viton-A® valve seat*

PORTING *(*2 and 4 port options)*

- **STANDARD INLET:**
  - 1/8-27 FNPT *(1 or 2)*
- **OUTLET PORTING:**
  - 1/8-27 FNPT *(1 or 2)*

OPTIONS

- Gauges *(brass or stainless steel)*
- Private label

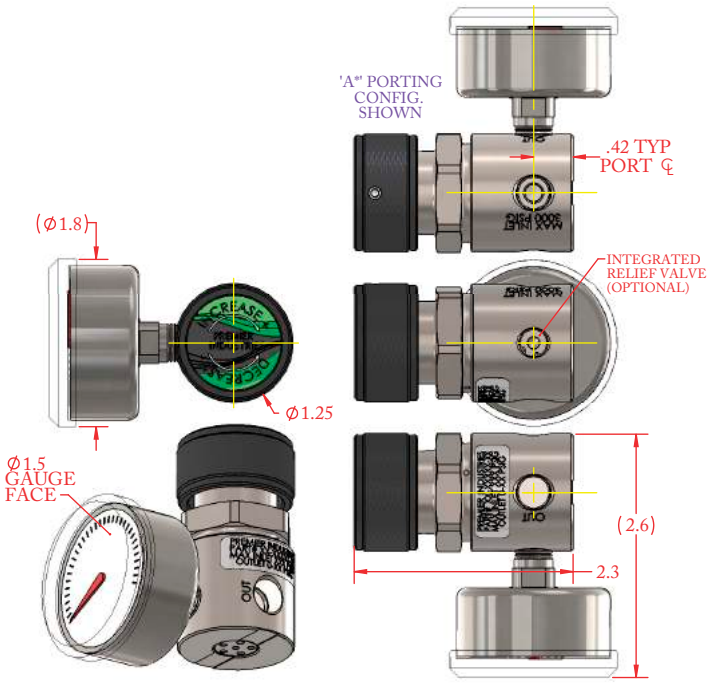

(part number: 50-12861 shown)

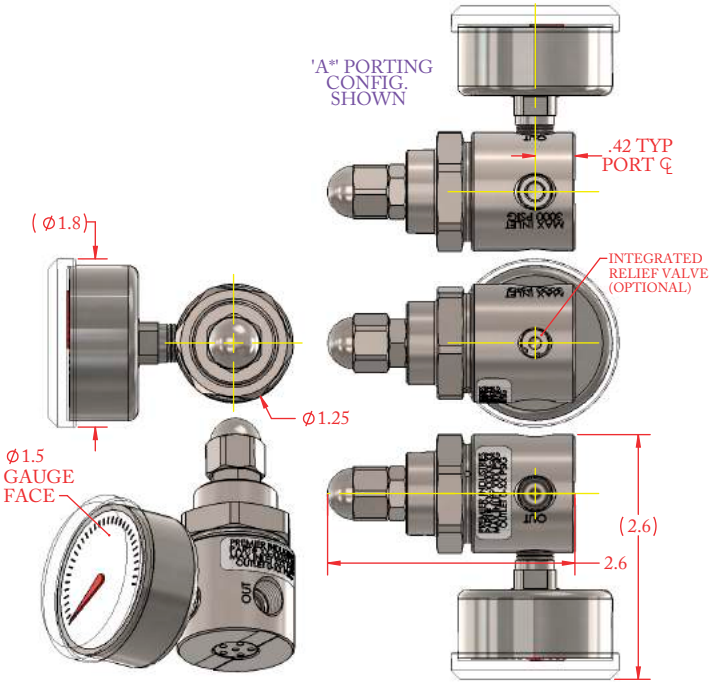

(part number: 50-12897 shown)

Viton-A, & Kalrez are registered trademarks of E.I.duPont de Nemours and Company
Elgiloy® is a registered trademark of Elgiloy Specialty Metals Division, Combined Metals of Chicago L.L.C.

DIAPHRAGM SENSED STABLE SET PRESSURE

Pressure Reducing Regulator

2310S SERIES

PART #	-	1	2	-	3	-	4	5
50-12861	-			-		-		

1	BODY/BONNET MATERIALS *(MAX. INLET PRESSURE)*
1	SAE 360 Brass, Nickel Plated *(body & bonnet)*
2	6061-T6 Aluminum, Nickel Plated *(body)* SAE 360 Brass, Nickel Plated *(bonnet)*
3	303 Stainless Steel, cleaned per spec #515 *(body)* SAE 360 Brass, Nickel Plated *(bonnet)*
4	303 Stainless Steel, cleaned per spec #515 *(body)* 303 Stainless Steel, cleaned per spec #515 *(bonnet)*
5	316 Stainless Steel, cleaned per spec #515 *(body)* SAE 360 Brass, Nickel Plated *(bonnet)*
6	316 Stainless Steel, cleaned per spec #515 *(body)* 303 Stainless Steel, cleaned per spec #515 *(bonnet)*
7	316 Stainless Steel, cleaned per spec #515 *(body)* 316 Stainless Steel, cleaned per spec #515 *(bonnet)*

2	BODY PORTING	
S	S porting, *2 port*	*(WITH OPTIONAL RELIEF VALVE)* RV
A	A porting, *3 port*	*(WITH OPTIONAL RELIEF VALVE)* RV
B	B porting, *3 port*	*(WITH OPTIONAL RELIEF VALVE)* RV
G	G porting, *3 port*	*(WITH OPTIONAL RELIEF VALVE)* RV
H	H porting, *3 port*	*(WITH OPTIONAL RELIEF VALVE)* RV
L	L porting, *4 port*	*RELIEF VALVE NOT AVAILABLE ON 'L' PORTING CONFIGURATION*

3	OUTLET PRESSURE	*RELIEF PRESSURE IF APPLICABLE*
1	0-15 psig *(0-1.03 bar)*	60-90 psig *(4.14-6.21 bar)*
2	0-30 psig *(0-2.07 bar)*	60-90 psig *(4.14-6.21 bar)*
3	0-50 psig *(0-3.45 bar)*	90-120 psig *(6.21-8.27 bar)*
4	0-75 psig *(0-5.17 bar)*	90-120 psig *(6.21-8.27 bar)*
5	0-100 psig *(0-6.89 bar)*	220-260 psig *(15.17- 7.93 bar)*
6	0-150 psig *(0-10.34 bar)*	220-260 psig *(15.17- 7.93 bar)*

4	GAUGES
0	None
1	Include gauges

Gauges not available for 'S' porting configuration,
Outlet gauge only on 'A' and 'B' configurations,
Inlet gauge only on 'G' and 'H' porting configurations,
Both inlet & outlet gauge on 'L' porting configuration

5	INTEGRATED RELIEF VALVE *OPTIONAL*
0	No relief valve
1	Include relief valve

Relief valve not available on 'L' porting configuration.

Contact factory for material certifications. Fees may apply.

2310S SERIES

DIAPHRAGM SENSED STABLE SET PRESSURE

Pressure Reducing Regulator

REGULATORS, VALVES, AND TORCHES
PREMIER INDUSTRIES
MINNEAPOLIS • MINNESOTA • USA

PRESET OUTLET PRESSURE

PART #	-	1	2	-	3	4	-	XXX
50-12897	-			-			-	

1	BODY/BONNET MATERIALS *(MAX. INLET PRESSURE)*
1	SAE 360 Brass, Nickel Plated *(body & bonnet)*
2	6061-T6 Aluminum, Nickel Plated *(body)* SAE 360 Brass, Nickel Plated *(bonnet)*
3	303 Stainless Steel, cleaned per spec #515 *(body)* SAE 360 Brass, Nickel Plated *(bonnet)*
4	303 Stainless Steel, cleaned per spec #515 *(body)* 303 Stainless Steel, cleaned per spec #515 *(bonnet)*
5	316 Stainless Steel, cleaned per spec #515 *(body)* SAE 360 Brass, Nickel Plated *(bonnet)*
6	316 Stainless Steel, cleaned per spec #515 *(body)* 303 Stainless Steel, cleaned per spec #515 *(bonnet)*
7	316 Stainless Steel, cleaned per spec #515 *(body)* 316 Stainless Steel, cleaned per spec #515 *(bonnet)*

2	BODY PORTING	
S	S porting, *2 port*	*(WITH OPTIONAL RELIEF VALVE)*
A	A porting, *3 port*	*(WITH OPTIONAL RELIEF VALVE)*
B	B porting, *3 port*	*(WITH OPTIONAL RELIEF VALVE)*
G	G porting, *3 port*	*(WITH OPTIONAL RELIEF VALVE)*
H	H porting, *3 port*	*(WITH OPTIONAL RELIEF VALVE)*
L	L porting, *4 port*	*RELIEF VALVE NOT AVAILABLE ON 'L' PORTING CONFIGURATION*

3	GAUGES
0	None
1	Include gauges

Gauges not available for 'S' porting configuration,
Outlet gauge only on 'A' and 'B' configurations,
Inlet gauge only on 'G' and 'H' porting configurations,
Both inlet & outlet gauge on 'L' porting configuration

4	INTEGRATED RELIEF VALVE *OPTIONAL*
0	No relief valve
1	Include relief valve

Relief valve not available on 'L' porting configuration.

IF REGULATOR INCLUDES A RELIEF VALVE, RELIEF SETTINGS ARE AS FOLLOWS:

'XXX'≤ 30 PSIG OUT / 60 PSIG RELIEF SETTING;
30< 'XXX'≤75 PSIG OUT/ 90 PSIG RELIEF SETTING.
75< 'XXX'≤100/ 160 PSIG RELIEF SETTING;
100< 'XXX'≤150/ 225 PSIG RELIEF SETTING

XXX	PRESET OUTLET PRESSURE

SPECIFY OUTLET PRESSURE PRESET 'XXX' IN PSIG.

MINIMUM 10 PSIG ('010'),
MAXIMUM 150 PSIG ('150').

OUTLET SET AT 2000 PSIG INLET
(UNLESS NOTED OTHERWISE ON WORK ORDER.)

Contact factory for material certifications. Fees may apply.

SINGLE STAGE DIAPHRAGM SENSED GENERAL PURPOSE

Pressure Reducing Regulators

2500 SERIES

PREMIER INDUSTRIES

1590 99th Ln NE,
Minneapolis, MN 55449
763-786-4020

MADE IN THE USA

Minneapolis, MN

DESCRIPTION

Premier 2500 Series pressure reducing regulators are single stage, diaphragm sensed, general purpose cylinder and line regulators. Premier 2500 Series regulators are versatile, available with: multiple body diameters, materials, porting configurations, and many optional items (pressure relief valves, shut off valves etc). Models are available for both corrosive and non-corrosive service, fitted with your choice of stainless steel or neoprene diaphragm. Premier 2500 Series regulators feature a 15 micron valve cartridge filter, 3500 PSIG max inlet pressure, and Cv 0.08 or 0.20.

FEATURES

- Compact size with optional body diameters of 1.5”, and 1.98”
- Optional stainless steel diaphragm minimizes inboard diffusion of air into regulator (neoprene diaphragm also available)
- Reduced particle contamination with 15 micron valve cartridge filter
- 3500 PSIG (241.3 bar) max inlet pressure
- Cv 0.08 or 0.20
- Optional integral needle style shut off valve
- Optional low profile hand knob
- Machined bar stock body, bonnet, and piston eliminates porosity found in castings

The Premier 2500 Series pressure reducing regulator’s design is remarkably flexible.
Contact Premier Industries for a custom 2500 Series regulator to meet your exact needs.

2500 SERIES

SINGLE STAGE DIAPHRAGM SENSED GENERAL PURPOSE

Pressure Reducing Regulators

SPECIFICATIONS

- **MAXIMUM INLET PRESSURE:** 3500 PSIG *(241.3 bar)*
- **CONTROL PRESSURE RANGES:**
  - 0-10 PSIG *(0 - 0.69 bar)*
  - 0-25 PSIG *(0 - 1.72 bar)*
  - 0-50 PSIG *(0 - 3.45 bar)*
  - 0-100 PSIG *(0 - 6.89 bar)*
  - 0-250 PSIG *(0 - 17.24 bar)*
  - 0-500 PSIG *(0 - 34.47 bar)*
- **FLOW (Cv):** 0.08, or 0.20

MATERIALS OF CONSTRUCTION

- **BODY OPTIONS:**
  - *Body diameters:* 1.5" and 1.98"
  - 316 Stainless Steel
  - SAE 360 Brass
  - SAE 360 Brass/Nickel Plated
  - 6061-T6 Aluminum
  - Monel®
- **BONNET OPTIONS:**
  - SAE 360 Brass
  - SAE 360 Brass/Nickel Plated
  - 6061-T6 Aluminum/Gold Anodize
  - Captured 6061-T6 Aluminum/Nickel Plated
- **DIAPHRAGM OPTIONS:**
  - Neoprene
  - 316 Stainless Steel
  - Elgiloy® *(Monel® body option)*
- **DIAPHRAGM SEAL:** PTFE
- **VALVE SEAT:** PTFE

PORTING

- **INLET/OUTLET OPTIONS**
  - 1/8 FNPT
  - 1/4-18 NPT *(on 1.98" diameter bodies)*
  - SAE J1926-4 *(on 1.98" diameter bodies)*

OPTIONS

- Gauges
- Integral shut off valve *(P/N: 50-12619)*
- Private label
- Panel mounting nut(s) *(P/N: 50-10240)*
- Pressure relief valves
- CGA connections
- Dome loaded design *(P/N: 50-11789)*
- Ø1.98 diameter body without mounting holes *(P/N: 50-11470)*

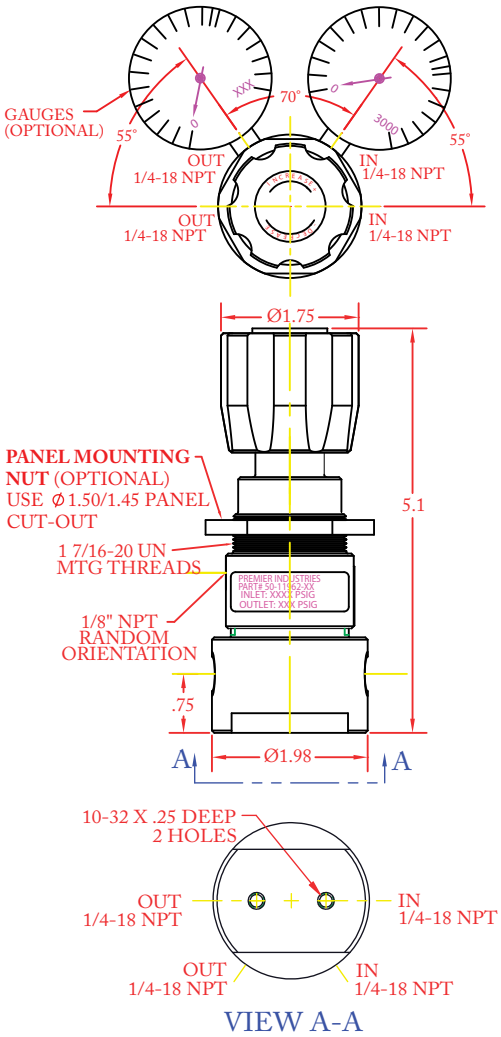

(Part number 50-11962 above, see selector chart for porting options)

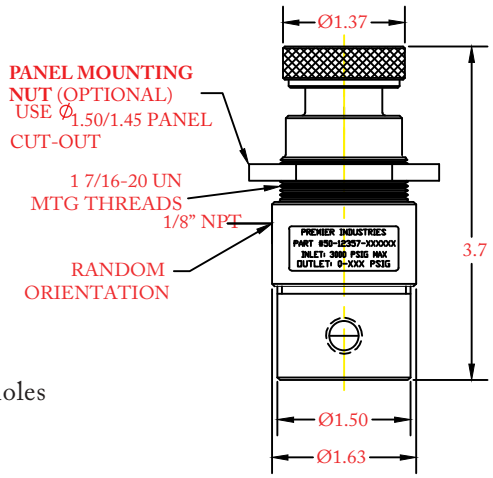

(Part number 50-12357 shown above, see selector chart for porting options)

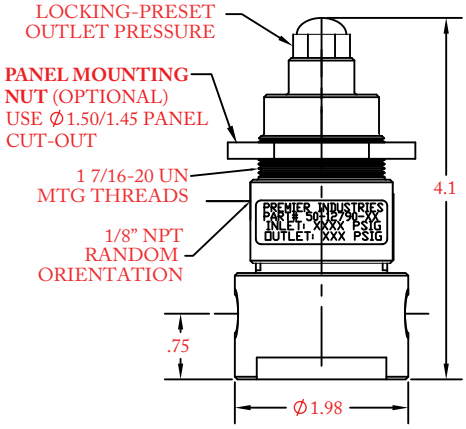

(Part number 50-12790 shown above, see selector chart for porting options)

Monel® is a registered trademark of Special Metals Corporation
Elgiloy® is a registered trademark of Elgiloy Special Metals Division, Combined Metals of Chicago L.L.C

SINGLE STAGE DIAPHRAGM SENSED GENERAL PURPOSE

Pressure Reducing Regulators

2500 SERIES

Ø1.98 BODY WITH MOUNTING HOLES

PART #	-	1	2	3	4	5	6	7	8
50-11962	-								

1	BODY MATERIAL *& FINISH*
2	316 Stainless Steel, *cleaned per spec #515*
3	6061-T6 Aluminum, *Clear Anodized*
5	SAE 360 Brass, *Nickel Plated*
6	Monel®, *(Elgiloy® diaphragm) cleaned per spec #515*
8	SAE 360 Brass, *Bright Dip*
2	**DIAPHRAGM MATERIAL**
Blank	316 Stainless Steel Diaphragm
N	Neoprene diaphragm
3	**OUTLET PRESSURE** *(outlet gauge range, if supplied)*
0	0 - 10 PSIG / *0 - 0.69 bar (per application)*
1	0 - 25 PSIG / 0 - 1.72 bar *(0-60 PSIG gauge)*
2	0 - 50 PSIG / 0 - 3.45 bar *(0-100 PSIG gauge)*
3	0 - 100 PSIG / 0 - 6.89 bar *(0-160 PSIG gauge)*
4	0 - 250 PSIG / 0 - 17.24 bar *(0-400 PSIG gauge)* ***(Stainless steel diaphragm only)***
5	0 - 500 PSIG / 0 - 34.47 bar ***(Stainless steel diaphragm only)***

4	GAUGES
Blank	no gauges (standard)
A	2" diameter, inlet only, stainless steel wetted gauge
B	2" diameter, outlet only, stainless steel wetted gauges
C	2" diameter, inlet & outlet, stainless steel wetted gauges
D	2" diameter, inlet only, brass wetted gauges
E	2" diameter, outlet only, brass wetted gauges
F	2" diameter, inlet & outlet, brass wetted gauges
H	2" diameter, outlet only, brass wetted/ chrome plated gauges
J	2" diameter inlet & outlet brass wetted/ chrome plated gauges
5	**PANEL MOUNTING NUT** *(optional)*
5	Mounting nut
8	No nut *(standard)*

6	PORTING OPTIONS
Blank	*(Standard)*
A	
B	
C	
D	
E	
F	
G	
H	
I	
J	
K	
L	

7	PORT TYPE
Blank	NPT (1/4")
2	SAE J1926-4 (1/4")
8	**MAIN VALVE Cv**
Blank	Cv 0.08 *(Standard)*
Y	Cv 0.20 without filter *(Hydraulic)*
Z	Cv 0.20

Monel® is a registered trademark of Special Metals Corporation
Elgiloy® is a registered trademark of Elgiloy Special Metals Division, Combined Metals of Chicago L.L.C

Contact factory for material certifications. Fees may apply.

SINGLE STAGE DIAPHRAGM SENSED GENERAL PURPOSE

Pressure Reducing Regulators

2500 SERIES

Ø1.5 BODY WITHOUT MOUNTING HOLES

PART #	-	1	2	3	4	5	6	7	8
50-12357	-								

1	BODY MATERIAL *& FINISH*
2	316 Stainless Steel, *cleaned per spec #515*
3	6061-T6 Aluminum, *Clear Anodized*
5	SAE 360 Brass, *Nickel Plated*
8	SAE 360 Brass, *Bright Dip*
2	**DIAPHRAGM MATERIAL**
Blank	316 Stainless Steel Diaphragm
N	Neoprene diaphragm
3	**OUTLET PRESSURE** *(outlet gauge range, if supplied)*
0	0 - 10 PSIG / *0 - 0.69 bar (per application)*
1	0 - 25 PSIG / 0 - 1.72 bar *(0-60 PSIG gauge)*
2	0 - 50 PSIG / 0 - 3.45 bar *(0-100 PSIG gauge)*
3	0 - 100 PSIG / 0 - 6.89 bar *(0-160 PSIG gauge)*
4	0 - 250 PSIG / 0 - 17.24 bar *(0-400 PSIG gauge) (Stainless steel diaphragm only)*
5	0 - 500 PSIG / 0 - 34.47 bar *(Stainless steel diaphragm only)*

4	GAUGES
Blank	no gauges (standard)
A	1.5" diameter, inlet only, stainless steel wetted gauge
B	1.5" diameter, outlet only, stainless steel wetted gauges
C	1.5" diameter, inlet & outlet, stainless steel wetted gauges
D	1.5" diameter, inlet only, brass wetted gauges
E	1.5" diameter, outlet only, brass wetted gauges
F	1.5" diameter, inlet & outlet, brass wetted gauges
H	1.5" diameter, outlet only, brass wetted/ chrome plated gauges
J	1.5" diameter inlet & outlet brass wetted/ chrome plated gauges
5	**PANEL MOUNTING NUT** *(optional)*
5	Mounting nut
8	No nut *(standard)*

6	PORTING OPTIONS
Blank	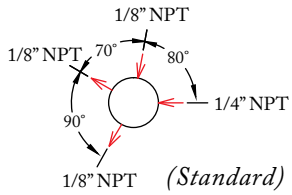 *(Standard)*
A	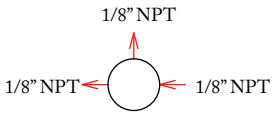
M	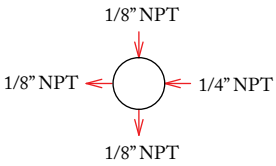
C	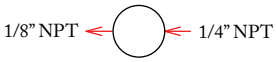
7	**MAIN VALVE Cv**
Blank	Cv 0.08 *(Standard)*
Z	Cv 0.20
8	**OPERATOR**
Blank	Adjustable handknob *(Standard)*
AN	Preset outlet pressure (locked w/ acorn nut)

Monel® is a registered trademark of Special Metals Corporation
Elgiloy® is a registered trademark of Elgiloy Special Metals Division, Combined Metals of Chicago L.L.C

Contact factory for material certifications. Fees may apply.

SINGLE STAGE DIAPHRAGM SENSED GENERAL PURPOSE

Pressure Reducing Regulators

2500 SERIES

Ø1.98 BODY, PRESET OUTLET PRESSURE, Cv 0.08

PART #	-	1	2	3	4	5
50-12790	-					

1	BODY MATERIAL *& FINISH*
2	316 Stainless Steel, *cleaned per spec #515*
3	6061-T6 Aluminum, *Clear Anodized*
5	SAE 360 Brass, *Nickel Plated*
8	SAE 360 Brass, *Bright Dip*
2	**OUTLET PRESSURE** *(outlet gauge range, if supplied)*
0	0 - 10 PSIG / *0 - 0.69 bar (per application)*
1	0 - 25 PSIG / 0 - 1.72 bar *(0-60 PSIG gauge)*
2	0 - 50 PSIG / 0 - 3.45 bar *(0-100 PSIG gauge)*
3	0 - 100 PSIG / 0 - 6.89 bar *(0-160 PSIG gauge)*
4	0 - 250 PSIG / 0 - 17.24 bar *(0-400 PSIG gauge)* ***(Stainless steel diaphragm only)***
5	0 - 500 PSIG / 0 - 34.47 bar ***(Stainless steel diaphragm only)***

3	GAUGES
Blank	no gauges (standard)
A	2" diameter, inlet only, stainless steel wetted gauge
B	2" diameter, outlet only, stainless steel wetted gauges
C	2" diameter, inlet & outlet, stainless steel wetted gauges
D	2" diameter, inlet only, brass wetted gauges
E	2" diameter, outlet only, brass wetted gauges
F	2" diameter, inlet & outlet, brass wetted gauges
H	2" diameter, outlet only, brass wetted/ chrome plated gauges
J	2" diameter inlet & outlet brass wetted/ chrome plated gauges
4	**PANEL MOUNTING NUT** *(optional)*
5	Mounting nut
8	No nut *(standard)*

5	PORTING OPTIONS *(1/4" FNPT)*
Blank	*(Standard)*
A	
B	
D	
E	
F	
G	
H	
I	
J	
K	

Monel® is a registered trademark of Special Metals Corporation
Elgiloy® is a registered trademark of Elgiloy Special Metals Division, Combined Metals of Chicago L.L.C

Contact factory for material certifications. Fees may apply.

SINGLE STAGE DIAPHRAGM SENSED ABSOLUTE PRESSURE

Pressure Reducing Regulators

2500A SERIES

PREMIER INDUSTRIES

1590 99th Ln NE,
Minneapolis, MN 55449
763-786-4020

MADE IN THE USA

Minneapolis, MN

DESCRIPTION

Premier 2500A Series regulators are single stage, diaphragm sensed, absolute pressure regulators. They can be used to reduce supply pressures up to 3000 PSIG (206.84 bar) into a vacuum environment for sub-atmospheric pressure control. Premier 2500A Series regulators feature a stainless steel diffusion-resistant metal diaphragm, Cv 0.08, inlet filter, and optional panel mount or bottom mount.

FEATURES

- Full vacuum sub-atmospheric pressure control
- Stainless steel diaphragm minimizes inboard diffusion of air into regulator
- Optional panel mounting nut
- Bottom mounting holes (#10-32 UNF, 2X)
- Non-venting
- Captured bonnet
- 15 micron sintered inlet filter
- 3000 PSIG (206.84 bar) max inlet pressure
- Cv 0.08
- Machined bar stock body, bonnet, and piston eliminates porosity found in castings

The Premier 2500A Series pressure reducing regulator's design is remarkably flexible. Contact Premier Industries for a custom 2500A Series regulator to meet your exact needs.

2500A SERIES

SINGLE STAGE DIAPHRAGM SENSED ABSOLUTE PRESSURE

Pressure Reducing Regulators

SPECIFICATIONS

- **MAXIMUM INLET PRESSURE:** 3000 PSIG *(206.84 bar)*
- **CONTROL PRESSURE RANGES:**
  - 50 mm Hg absolute - 15 psig (*1.0 bar)*

  ***50 mm Hg absolute = 28" Hg*
- **FLOW (Cv):** 0.08

MATERIALS OF CONSTRUCTION

- **BODY:**
  - SAE 360 Brass/Nickel Plated
- **BONNET:**
  - SAE 360 Brass/Nickel Plated
- **DIAPHRAGM:**
  - 316 Stainless Steel
- **DIAPHRAGM SEAL:** PTFE
- **VALVE SEAT:** PFA
- **INLET FILTER:** 15 micron sintered bronze

PORTING

- **INLET:**
  - 1/4-18 NPT
- **OUTLET:**
  - 1/4-18 NPT *(28" Hg VAC-15 PSIG)*
- **CAPTURED BONNET VENT:**
  - 1/8 NPT

OPTIONS

- Gauges *(2.5 inch diameter, brass nickel plated)*
- Private label
- Panel mounting nut *(P/N: 50-10240)*

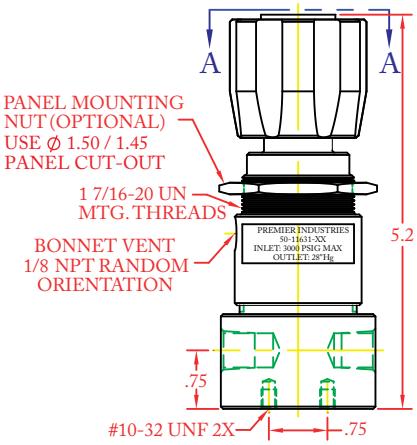

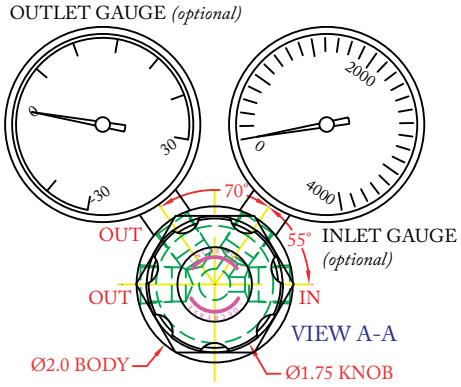

(Part number 50-11631 shown above)

Contact factory for material certifications. Fees may apply.

DOME LOADED SINGLE STAGE DIAPHRAGM SENSED

Pressure Reducing Regulators

2500DL SERIES

PREMIER INDUSTRIES

1590 99th Ln NE,
Minneapolis, MN 55449
763-786-4020

MADE IN THE USA

Minneapolis, MN

DESCRIPTION

Premier 2500DL Series regulators dome loaded, single stage, diaphragm sensed, pressure reducing regulators are rated for inlet pressure up to 3000 PSIG (206.84 bar), control pressures up to 500 PSIG (34.47 bar), and Cv 0.08 or 0.20. Models are available for both corrosive and non-corrosive service, fitted with your choice of stainless steel or neoprene diaphragm.

FEATURES

- Compact size
- Optional stainless steel diaphragm minimizes inboard diffusion of air into regulator (model with neoprene diaphragm also available)
- 3000 PSIG (206.84 bar) max inlet pressure
- Cv 0.08 or 0.20
- Non-venting
- Machined bar stock body, bonnet, and piston eliminates porosity found in castings

The Premier 2500DL Series pressure reducing regulator's design is remarkably flexible.
Contact Premier Industries for a custom 2500DL Series regulator to meet your exact needs.

2500DL SERIES

DOME LOADED SINGLE STAGE DIAPHRAGM SENSED

Pressure Reducing Regulators

SPECIFICATIONS

- **MAXIMUM INLET PRESSURE:** 3000 PSIG *(206.84 bar)*
- **MAXIMUM CONTROL PRESSURE:** 500 PSIG *(34.47 bar)*
- **FLOW (Cv):** 0.08, or 0.20
- **LOAD RATIO:**
  - **Stainless steel diaphragm:** 1:1**
  - **Neoprene diaphragm:** 0.785:1

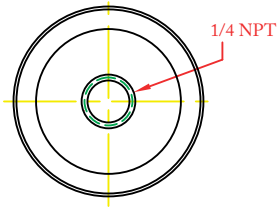

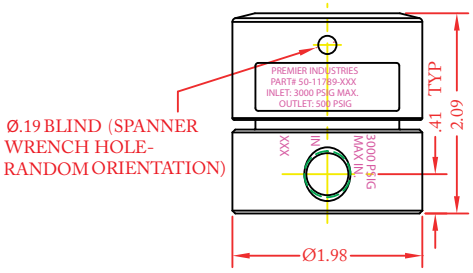

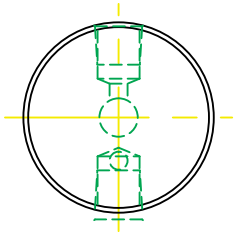

(Part number 50-11789 shown above)

MATERIALS OF CONSTRUCTION

- **BODY OPTIONS:**
  - 316 Stainless Steel
  - SAE 360 Brass, Bright Dip
  - SAE 360 Brass, Nickel Plated
- **BONNET OPTIONS:**
  - 316 Stainless Steel
  - SAE 360 Brass, Bright Dip
  - SAE 360 Brass, Nickel Plated
- **DIAPHRAGM OPTIONS:**
  - Neoprene
  - 316 Stainless Steel
- **DIAPHRAGM SEAL:** PTFE
- **VALVE SEAT:** PCTFE

PORTING

- **INLET:**
  - 1/4 FNPT
- **OUTLET:**
  - 1/4-18 NPT
- **DOME PORT:**
  - 1/4-18 NPT

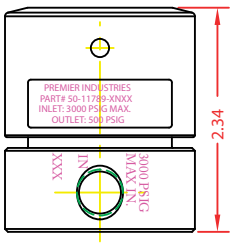

(50-11789-XNXX neoprene diaphragm model shown above)

OPTIONS

- Private label
- Gauges

DOME LOADED SINGLE STAGE DIAPHRAGM SENSED

Pressure Reducing Regulators

2500DL SERIES

PART #	-	1	2	3	4
50-11789	-				

1	BODY MATERIAL *& FINISH*
1	316 Stainless Steel, *cleaned per spec #515*
3	SAE 360 Brass, *Nickel Plated*
4	SAE 360 Brass, *Bright Dip*
2	**DIAPHRAGM MATERIAL**
Blank	316 Stainless Steel Diaphragm
N	Neoprene diaphragm
3	**MAIN VALVE Cv**
0	Cv 0.08
2	Cv 0.20

4	PORTING CONFIGURATIONS
1	
2	
3	
4	
5	
6	

DOME LOADED BIAS SPRING DIAPHRAGM SENSED

Pressure Reducing Regulators

2500DLB SERIES

PREMIER INDUSTRIES

1590 99th Ln NE,
Minneapolis, MN 55449
763-786-4020

MADE IN THE USA

Minneapolis, MN

DESCRIPTION

Premier 2500DLB Series dome loaded/bias spring, single stage, diaphragm sensed, pressure reducing regulators, are rated for inlet pressure up to 3000 PSIG (206.84 bar), load pressures up to 500 PSIG (34.47 bar), and Cv 0.08 or 0.20. 2500DLB Series regulators are elastomer free and designed for use in tracking applications.

FEATURES

- Compatible with electro pneumatic controllers
- Elastomer free
- Designed for tracking applications
- 3000 PSIG (206.84 bar) max inlet pressure
- Cv 0.08 or 0.20
- Non-venting

The Premier 2500DLB Series pressure reducing regulator's design is remarkably flexible. Contact Premier Industries for a custom 2500DLB Series regulator to meet your exact needs.

2500DLB SERIES

DOME LOADED BIAS SPRING DIAPHRAGM SENSED

Pressure Reducing Regulators

SPECIFICATIONS

- **MAXIMUM INLET PRESSURE:** 3000 PSIG *(206.84 bar)*
- **MAXIMUM LOAD PRESSURE:** 500 PSIG *(34.47 bar)*
- **PRESET SPRING BIAS:** up to 150 PSIG *(10.34 bar)*
- **FLOW (Cv):** 0.08, or 0.20

MATERIALS OF CONSTRUCTION

- **PROCESS WETTED MATERIAL OPTIONS:**
  - 316 Stainless Steel
  - 303 Stainless Steel
  - Monel 405® & Elgiloy®
  - SAE 360 Brass, Nickel Plated
- **DIAPHRAGM:**
  - 316 Stainless Steel
- **VALVE SEAT:**
  - PCTFE
- **SEALS:**
  - PTFE
- **OTHER WETTED MATERIALS (DOME SIDE):**
  - 303 Stainless Steel *(for 303 stainless steel process option)*
  - 316 Stainless Steel *(for 316 stainless steel & Monel Process options)*
  - SAE 360 Brass, Nickel Plated *(for SAE 360 Brass nickel plated option)*

PORTING

- **INLET:**
  - 1/4" FNPT
- **OUTLET:**
  - 1/4" FNPT
- **LOAD PORT:**
  - 1/4" FNPT

OPTIONS

- Private label
- Gauges

OUTLET PORTS: 1/4-18 FNPT

OUTLET PRESSURE =
DOME LOAD PRESSURE +
SPRING BIAS PRESSURE

DOME LOADING PORT:
1/4-18 FNPT, 500 PSIG MAX

SPRING BIAS ADJUSTMENT SCREW
150 PSIG MAX SPRING BIAS

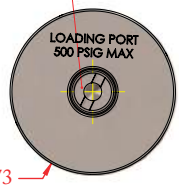

ϕ1.73

INLET: 1/4-18 FNPT
3000 PSIG MAX

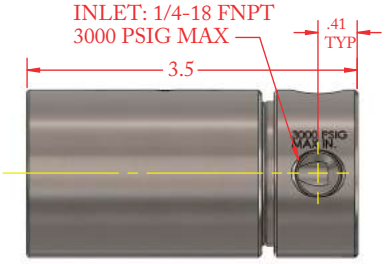

(Part Number: 50-12473 shown above)

Monel® is a registered trademark of Special Metals Corporation
Elgiloy® is a registered trademark of Elgiloy Specialty Metals Division, Combined Metals of Chicago L.L.C

DOME LOADED BIAS SPRING DIAPHRAGM SENSED

Pressure Reducing Regulators

2500DLB SERIES

PART #	-	1	2	3	-	XXX
50-12473	-				-	

1	PROCESS WETTED MATERIALS
1	316 Stainless Steel
2	303 Stainless Steel
3	Monel 405® & Elgiloy®
4	SAE 360 Brass, Nickel Plated
2	**PORTING OPTIONS**
1	'A' Porting, no gauges
2	'C' Porting, no gauges
3	'I' Porting, no gauges 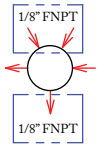
3	**FLOW COEFFICIENT (Cv)**
1	Cv 0.08 max
2	Cv 0.20 max

XXX	PRESET SPRING BIAS
	**Preset spring bias pressure at 3000 psig inlet pressure. Specify 0-150. Pressure units are psig. (EX: specify '30' for 30 psig spring bias pressure.) Preset spring bias pressure is field adjustable by qualified technicians only.

Monel® is a registered trademark of Special Metals Corporation
Elgiloy® is a registered trademark of Elgiloy Specialty Metals Division, Combined Metals of Chicago L.L.C

Contact factory for material certifications. Fees may apply.

DIAPHRAGM SENSED STABLE SET PRESSURE

Pressure Reducing Regulators

2510 SERIES

PREMIER INDUSTRIES

1590 99th Ln NE,
Minneapolis, MN 55449
763-786-4020

MADE IN THE USA

Minneapolis, MN

DESCRIPTION

Premier 2510 Series pressure reducing regulators are part of a new family of Stable Set Pressure (SSP) regulators from Premier Industries. These single stage regulators are equipped with new technology that enables increased stability in delivery pressure and a significantly reduced supply pressure effect *(decaying inlet characteristic)*. These diaphragm sensed, general purpose cylinder and line regulators are available with a wide range of materials/porting options. The Premier 2510 Series feature the choice of a neoprene or 316 stainless steel diaphragm, max inlet pressure of 3500 PSIG *(241.3 bar)* and Cv 0.20.

FEATURES

- Reduced decaying inlet characteristic *(supply pressure effect)* in a single stage design
- Cv 0.20
- 3500 PSIG *(241.3 bar)* max inlet pressure
- Machined bar stock body & bonnet, eliminates porosity found in castings
- Optional integral outlet pressure relief valve
- Economical pricing
- Optional integral needle style shut off valve
- Optional low profile hand knob
- Compact 1.5 inch diameter body option available

The Premier 2510 Series pressure reducing regulator's design is remarkably flexible. Contact Premier Industries for a custom 2510 Series regulator to meet your exact needs.

2510 SERIES

DIAPHRAGM SENSED STABLE SET PRESSURE

Pressure Reducing Regulators

SPECIFICATIONS

- **MAXIMUM INLET PRESSURE:** 3500 PSIG *(241.3 bar)*
- **CONTROL PRESSURE RANGES:**
  - 0-10 PSIG *(0 - 0.69 bar)*
  - 0-25 PSIG *(0 - 1.72 bar)*
  - 0-50 PSIG *(0 - 3.45 bar)*
  - 0-100 PSIG *(0 - 6.89 bar)*
  - 0-250 PSIG *(0 - 17.24 bar) stainless steel diaphragm only*
  - 0-500 PSIG *(0 - 34.47 bar) stainless steel diaphragm only*
- **FLOW (Cv):** 0.20

MATERIALS OF CONSTRUCTION

- **BODY/BONNET MATERIAL OPTIONS**
  - SAE 360 Brass, Bright Dip *(body & bonnet)*
  - SAE 360 Brass, Nickel Plated *(body & bonnet)*
  - 303 Stainless Steel *(body)*, Brass Nickel Plated *(bonnet)*
  - 316 Stainless Steel *(body)*, 303 Stainless Steel *(bonnet)*
- **DIAPHRAGM OPTIONS:**
  - Neoprene
  - 316 Stainless Steel
- **O-RING SEAL MATERIAL:**
  - Nitrile
  - Viton®
  - EPDM
  - Neoprene
  - Kalrez® *(contact factory for pricing)*
- **VALVE SEAT:**
  - PCTFE
  - PTFE
- **OTHER WETTED COMPONENTS:**
  - SAE 360 Brass & 300 Series Stainless Steel
- ***OPTIONAL* GAUGES:**
  - 2.0" diameter, brass wetted components, finish to match body/bonnet finish

PORTING

- **INLET:**
  - 1/8 FNPT
  - 1/4 FNPT
- **OUTLET:**
  - 1/8 FNPT
  - 1/4-18 NPT (on 1.75" and 2.0" diameter bodies)

OPTIONS

- Gauges, brass wetted components, finish to match body/bonnet finish
- Body/material finishes and diameters
- Private label
- Panel mounting nut
- Bottom mounting holes
- Pressure relief valves
- CGA connections

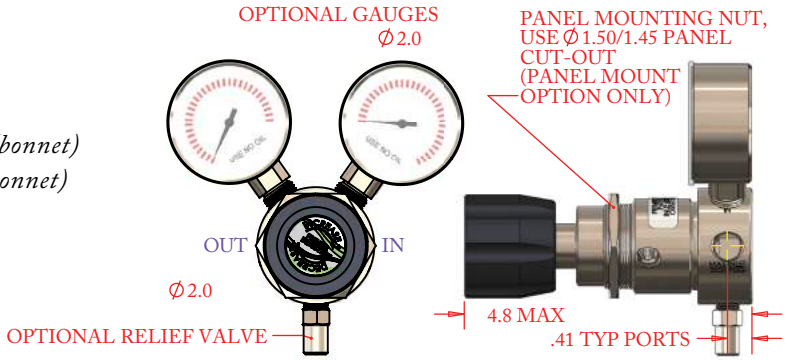

(Part number: 50-12308-2I-XX-X2-22 shown above)

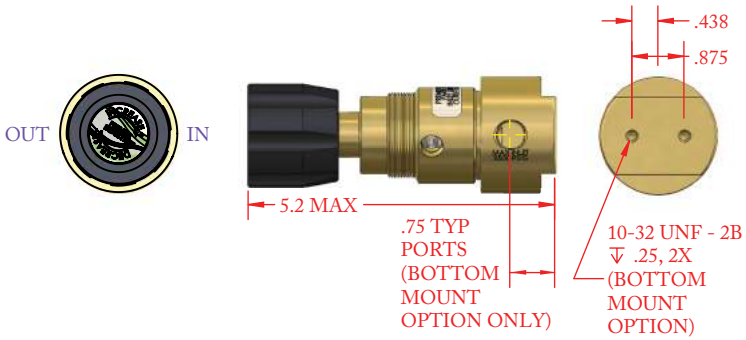

(Part number: 50-12308-1C-XX-X1-13 shown above)

Viton® and Kalrez® are registered trademarks of E.I.duPont de Nemours and Company.

DIAPHRAGM SENSED STABLE SET PRESSURE

Pressure Reducing Regulators

2510 SERIES

PART #	-	1	2	-	3	4	-	5	6	-	7	8	9
50-12308	-			-			-			-			

1	BODY/BONNET MATERIAL *& FINISH*
1	SAE 360 Brass, Bright Dip *(body & bonnet)*
2	SAE 360 Brass, Nickel Plated *(body & bonnet)*
3	303 Stainless Steel *(body)*, SAE 360 Brass, Nickel Plated *(bonnet)*
4	316 Stainless Steel *(body)*, 303 Stainless Steel *(bonnet)*

2	PORTING OPTIONS
S	
A	
B	
C	
D	
E	
F	
G	
H	
I	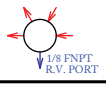
J	

3	MAIN VALVE SEAT MATERIAL
1	PCTFE
2	PTFE

4	O-RING SEAL MATERIAL
1	Nitrile
2	Viton®
3	EPDM
4	Neoprene
5	Kalrez® *(contact factory for pricing)*

5	OUTLET PRESSURE *(outlet gauge range)*
1	0 - 10 PSIG / *0 - 0.69 bar (per application)*
2	0 - 25 PSIG / 0 - 1.72 bar *(0-60 PSIG gauge)*
3	0 - 50 PSIG / 0 - 3.45 bar *(0-100 PSIG gauge)*
4	0 - 250 PSIG / 0 - 17.24 bar *(0-400 PSIG gauge)* *stainless steel diaphragm only*
5	0 - 500 PSIG / 0 - 34.47 bar *(0-600 PSIG gauge)* *stainless steel diaphragm only*
6	0 - 100 PSIG / 0 - 6.89 bar *(0-160 PSIG gauge)*

6	GAUGES *(see note 1)*
1	No gauges
2	Include gauges

7	RELIEF VALVE *(see note 2)*
1	No relief valve
2	Include relief valve

8	MOUNTING
1	None
2	Panel mount
3	Bottom mount
4	Panel mount & bottom mount

9	DIAPHRAGM MATERIAL
Blank	Neoprene *Outlet pressure: 100 psig (6.89 bar) max*
S	316 Stainless Steel *Outlet pressure: 500 psig (34.47 bar) max*

NOTES:
1. *INLET GAUGE ON S,D,F,G,H, & I*
2. *RELIEF VALVE AVAILABLE ON PORTING CONFIGURATION T ONLY. RELIEF VALVE SETTING 90-420 PSIG BASED ON OUTLET PRESSURE OPTION. NOT AVAILABLE FOR 500 PSIG OUTLET.*

Viton® & Kalrez® are registered trademarks of E.I.duPont de Nemours and Company.
Contact factory for material certifications. Fees may apply.

SINGLE STAGE HIGH SENSITIVITY DIAPHRAGM SENSED

Pressure Reducing Regulators

2550 SERIES

PREMIER INDUSTRIES

1590 99th Ln NE,
Minneapolis, MN 55449
763-786-4020

MADE IN THE USA

Minneapolis, MN

DESCRIPTION

Premier 2550 Series regulators are single stage, increased sensitivity, diaphragm sensed, pressure reducing regulators, designed for inlet pressures up to 3000 psig *(206.8 bar),* and Cv 0.08 or 0.2. They are used to regulate a broad range of non-corrosive and corrosive media *(based on materials of construction).*

FEATURES

- Large stainless steel diaphragm for increased sensitivity and reduced droop
- ± 1% of outlet pressure range
- Stainless steel diaphragm minimizes inboard diffusion of air into the regulator
- Flow capacity (Cv): 0.08 or 0.2
- Optional panel mounting nuts
- Non-venting & self-venting designs
- Economical pricing
- Machined bar stock body eliminates porosity found in castings

The Premier 2550 Series pressure reducing regulator's design is remarkably flexible. Contact Premier Industries for a custom 2550 Series regulator to meet your exact needs.

2550 SERIES

SINGLE STAGE HIGH SENSITIVITY DIAPHRAGM SENSED

Pressure Reducing Regulators

SPECIFICATIONS

- **MAXIMUM INLET PRESSURE:** 3000 PSIG *(206.8 bar)*
- **CONTROL PRESSURE RANGES:**
  - 0-10 PSIG *(0 - 0.69 bar)*
  - 0-25 PSIG *(0 - 1.72 bar)*
  - 0-50 PSIG *(0 - 3.45 bar)*
  - 0-100 PSIG *(0 - 6.89 bar)*
  - 0-150 PSIG *(0 - 10.34 bar)*
  - 0-250 PSIG *(0 - 17.24 bar) (P/N: 50-11487 only)*
- **FLOW (Cv):** 0.08 *(standard)* or 0.2

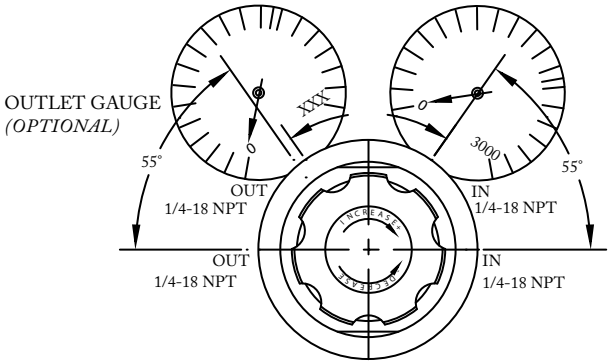

MATERIALS OF CONSTRUCTION

- **BODY:**
  - 316 Stainless Steel
  - SAE 360 Brass/Bright Dip
  - SAE 360 Brass/Nickel Plated
  - 6061-T6 Aluminum/Clear Anodized
- **BONNET:**
  - SAE 360 Brass/Nickel Plated
  - 6061-T6 Aluminum/Clear Anodized
- **DIAPHRAGM:**
  - 316 Stainless Steel
  - Neoprene *(P/N: 50-11487 only)*
- **DIAPHRAGM SEAL:**
  - PTFE
- **MAIN VALVE SEAT:**
  - PTFE

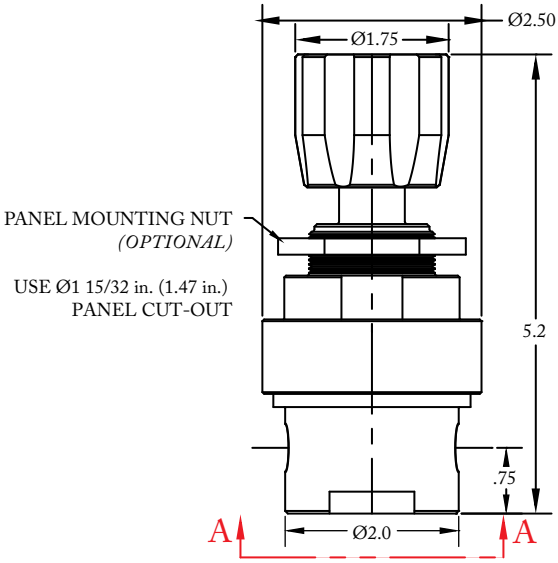

PORTING

- **STANDARD INLET/OUTLET** *(P/N: 50-11487)*:
  - 1/4-18 FNPT
  - *Contact factory for other options*
- **STANDARD INLET/OUTLET** *(P/N: 50-12943, self-venting)*:
  - 1/4 SAE AS5202
  - *Contact factory for other options*

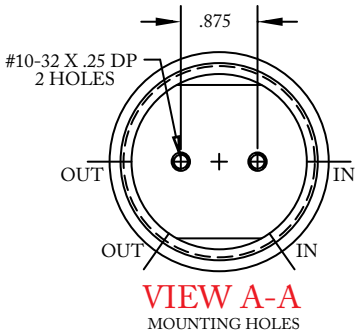

OPTIONS

- Gauges *(optional)* 2" diameter
- Private Label
- Panel Mounting Nut
- NACE compliant design: P/N: 50-12911

(Part number: 50-11487 shown above with standard porting)

SINGLE STAGE HIGH SENSITIVITY DIAPHRAGM SENSED

Pressure Reducing Regulators

2550 SERIES

NON-VENTING

PART #	-	1	2	3	4	5	6	7
50-11487	-							

1	BODY MATERIAL *& FINISH*
2	316 Stainless Steel, *cleaned per spec #515*
3	6061-T6 Aluminum, *Clear Anodized*
5	SAE 360 Brass, *Nickel Plated*
8	SAE 360 Brass, *Bright Dip*
2	**DIAPHRAGM MATERIAL**
Blank	316 Stainless Steel Diaphragm
N	Neoprene diaphragm
3	**OUTLET PRESSURE** *(outlet gauge range, if supplied)*
0	0 - 10 PSIG / *0 - 0.69 bar (per application)*
1	0 - 25 PSIG / 0 - 1.72 bar *(0-60 PSIG gauge)*
2	0 - 50 PSIG / 0 - 3.45 bar *(0-100 PSIG gauge)*
3	0 - 100 PSIG / 0 - 6.89 bar *(0-160 PSIG gauge)*
4	0 - 150 PSIG / 0 - 10.34 bar *(0-200 PSIG gauge)*
5	0 - 250 PSIG / 0 - 17.24 bar *(0-400 PSIG gauge)*

4	GAUGES
Blank	no gauges *(standard)*
A	2" diameter, inlet only, stainless steel wetted gauge
B	2" diameter, outlet only, stainless steel wetted gauges
C	2" diameter, inlet & outlet, stainless steel wetted gauges
D	2" diameter, inlet only, brass wetted gauges
E	2" diameter, outlet only, brass wetted gauges
F	2" diameter, inlet & outlet, brass wetted gauges
H	2" diameter, outlet only, brass wetted/ chrome plated gauges
J	2" diameter inlet & outlet brass wetted/ chrome plated gauges
5	**PANEL MOUNTING NUT** *(optional)*
5	Mounting nut
8	No nut *(standard)*

6	PORTING OPTIONS
Blank	*(Standard)*
A	
B	
C	
D	
E	
F	
G	
H	
I	
J	
K	
L	

7	MAIN VALVE Cv
Blank	Cv 0.08 *(standard)*
Y	Cv 0.20 w/o filter *(hydraulic service)*
Z	Cv 0.20

Contact factory for material certifications. Fees may apply.

SINGLE STAGE DIAPHRAGM SENSED ABSOLUTE PRESSURE

Pressure Reducing Regulators

2550A SERIES

PREMIER INDUSTRIES

1590 99th Ln NE,
Minneapolis, MN 55449
763-786-4020

MADE IN THE USA

Minneapolis, MN

DESCRIPTION

Premier 2550A Series regulators are single stage, diaphragm sensed, increased sensitivity, absolute pressure regulators. They can be used to reduce supply pressures up to 3000 PSIG (206.84 bar) into a vacuum environment for sub-atmospheric pressure control. Premier 2550A Series regulators feature a large Elgiloy® diaphragm, Cv 0.08, and optional panel mount or bottom mount.

FEATURES

- Full vacuum sub-atmospheric pressure control
- Large Elgiloy® diaphragm for increased sensitivity and reduced droop
- Elgiloy® diaphragm minimizes inboard diffusion of air into the regulator
- Optional panel mount or bottom mount
- Captured bonnet vent
- 15 micron sintered inlet filter
- 3000 PSIG (206.84 bar) max inlet pressure
- Cv 0.08
- Optional NACE compliant design

The Premier 2550A Series pressure reducing regulator's design is remarkably flexible.
Contact Premier Industries for a custom 2550A Series regulator to meet your exact needs.

2550A SERIES

SINGLE STAGE DIAPHRAGM SENSED ABSOLUTE PRESSURE

Pressure Reducing Regulators

SPECIFICATIONS

- **MAXIMUM INLET PRESSURE:** 3000 PSIG *(206.84 bar)*
- **OUTLET PRESSURE RANGES:**
  - 50 mm Hg absolute - 15 psig *(30" HG-30 psig)*

  ***50 mm Hg absolute = 28" Hg*
- **FLOW (Cv):** 0.08

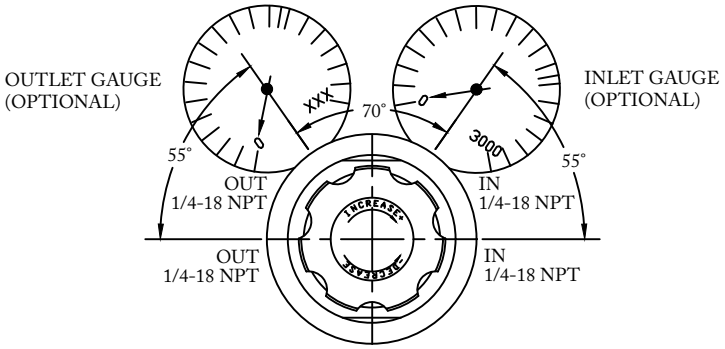

MATERIALS OF CONSTRUCTION

- **BODY:**
  - 316 Stainless Steel
- **BONNET:**
  - SAE 360 Brass/Nickel Plated *(P/N 50-12757)*
  - 316 Stainless Steel *(P/N 50-12484)*
- **DIAPHRAGM:**
  - Elgiloy®
- **DIAPHRAGM SEAL:** PTFE
- **VALVE SEAT:** PTFE

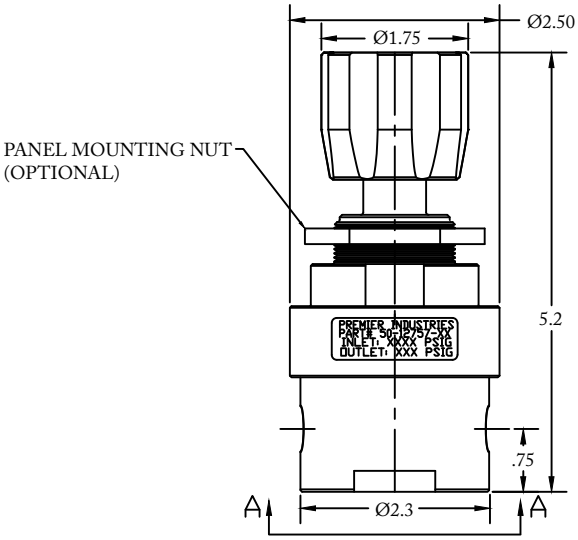

PORTING

- **INLET:**
  - 1/4-18 NPT
- **OUTLET:**
  - 1/4-18 NPT

OPTIONS

- Gauges *(2 inch diameter)*
- Private label
- Panel mounting nut *(P/N: 50-10240)*

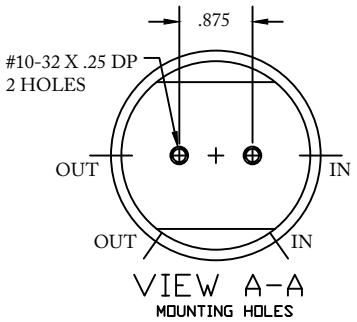

(Part number 50-12757 | 50-12484 shown above)

Elgiloy® is a registered Trademark of Elgiloy Specialty Metals Division, Combined Metals of Chicago L.L.C

Contact factory for material certifications. Fees may apply.

SINGLE STAGE DIAPHRAGM SENSED ABSOLUTE PRESSURE

Pressure Reducing Regulators

2550A SERIES

STANDARD MODEL, BRASS/NICKEL PLATED BONNET

PART #	-	1	2	3	4	5
50-12757	-					

1	BODY MATERIAL *& FINISH*
2	316 Stainless Steel, *cleaned per spec #515*
2	**OUTLET PRESSURE**
0	0-50 mm Hg Absolute-15 psig *(30" HG-30 psig)*
3	**GAUGES** *(OPTIONAL)*
Blank	no gauges *(standard)*
A	2" diameter, inlet only, stainless steel wetted gauge
B	2" diameter, outlet only, stainless steel wetted gauge
C	2" diameter, inlet & outlet, stainless steel wetted gauges
4	**PANEL MOUNTING NUT** *(optional)*
5	Mounting nut
8	No nut *(standard)*

5	PORTING OPTIONS
Blank	*('C', Standard)*
A	
B	
D	
E	
F	
G	
H	
I	
J	
K	
L	
S	

Contact factory for material certifications. Fees may apply.

SINGLE STAGE PISTON SENSED

Pressure Reducing Regulators

2600 SERIES

PREMIER INDUSTRIES

1590 99th Ln NE,
Minneapolis, MN 55449
763-786-4020

MADE IN THE USA

Minneapolis, MN

DESCRIPTION

The Premier 2600 Series pressure reducing regulators are single stage, piston sensed, general purpose cylinder and line regulators. Premier 2600 Series regulators feature a max inlet pressure of 3500 PSIG *(241.32 bar)*, control pressures up to 2500 PSIG *(172.37 bar)*, and Cv 0.08, or 0.20. Models are available for both corrosive and non-corrosive service featuring a 316 stainless steel piston/piston housing, and a variety of optional bonnet, body, & seal materials.

FEATURES

- Optional pressure relief valve
- Stainless steel piston/piston housing
- 3500 PSIG *(241.32 bar)* max inlet pressure
- Control pressure up to 2500 PSIG *(172.37 bar)*
- Cv 0.08, or 0.20
- Optional integral shut off valve
- Compact size
- Non-venting
- Machined bar stock body, bonnet, and piston eliminates porosity found in castings
- Economical pricing

The Premier 2600 Series pressure reducing regulator's design is remarkably flexible.
Contact Premier Industries for a custom 2600 Series regulator to meet your exact needs.

2600 SERIES

SINGLE STAGE PISTON SENSED

Pressure Reducing Regulators

SPECIFICATIONS

- **MAXIMUM INLET PRESSURE:** 3500 PSIG *(241.32 bar)*
- **CONTROL PRESSURE RANGES:**
  - 0-200 PSIG *(0 - 13.79 bar)*
  - 0-250 PSIG *(0 - 17.24 bar)*
  - 0-500 PSIG *(0 - 34.47 bar)*
  - 0-1000 PSIG *(0 - 68.95 bar)*
  - 0-1500 PSIG *(0 - 103.42 bar)*
  - 0-2000 PSIG *(0 - 137.9 bar)*
  - 0-2500 PSIG *(0 - 172.37 bar)*
- **FLOW (Cv):** 0.08, 0.20
  (0.30 available, see part # 50-11853)

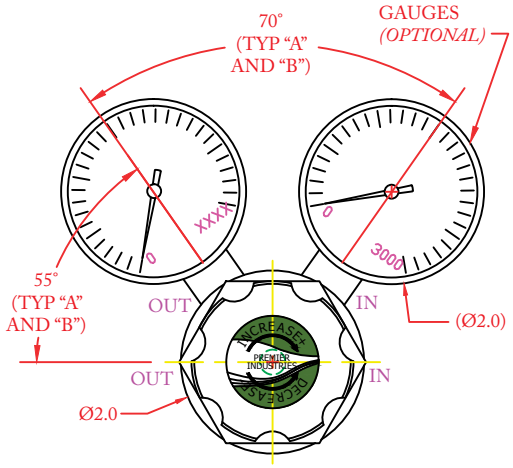

MATERIALS OF CONSTRUCTION

- **BODY OPTIONS:**
  - 316 Stainless Steel
  - 303 Stainless Steel
  - SAE 360 Brass/Nickel Plated
  - SAE 360 Brass/Bright Dip
  - 6061-T6 Aluminum/Clear Anodized
- **PISTON/PISTON HOUSING:**
  - 316 Stainless Steel
- **MAIN VALVE CARTRIDGE SEAL:**
  - PTFE
- **O-RING OPTIONS:**
  - Viton-A®
  - Buna-n
  - Neoprene
  - EPDM
- **VALVE SEAT:** PCTFE
- **GAUGE OPTIONS:** *(Optional)*
  - 316 Stainless Steel
  - SAE 360 Brass/Nickel Plated

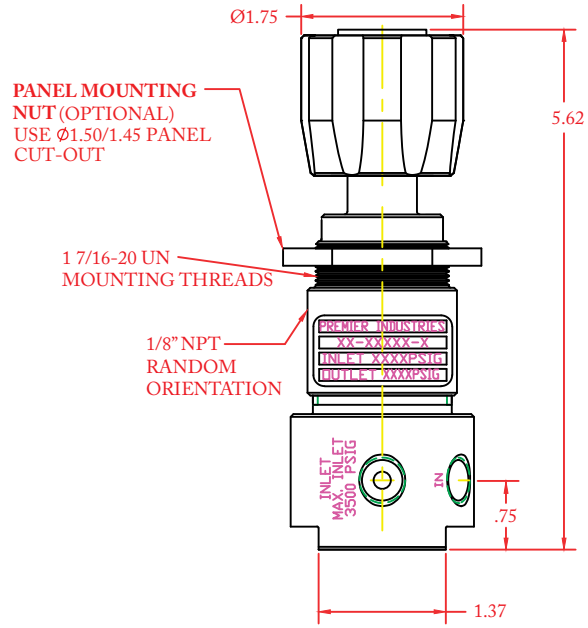

PORTING

- **INLET:**
  - 1/4-18 NPT
- **OUTLET:**
  - 1/4-18 NPT

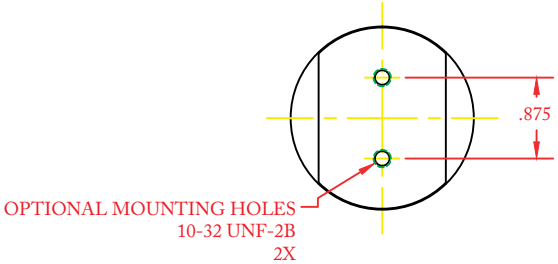

OPTIONS

- Panel mounting nut (6061-T6 Aluminnum/Anodized)
- Relief valve
- Private label
- Purge block
- Cv 0.30 *(Part Number: 50-11853)*
- Venting (See 2660 Series)

(Part number shown above: 50-11628)

Viton-A® is a registered trademark of E.I.duPont de Nemours and Company

SINGLE STAGE PISTON SENSED

Pressure Reducing Regulators

2600 SERIES

PART #	-	1	2	3	4	5	6	7	8
50-11628	-								

1	**BODY MATERIAL** *& FINISH*
1	316 Stainless Steel, *cleaned per spec #515*
2	303 Stainless Steel, *cleaned per spec #515*
3	SAE 360 Brass, *Nickel Plated*
4	SAE 360 Brass, *Bright Dip*
5	6061-T6 Aluminum, *Clear Anodized*
2	**O-RING SEALS**
1	Viton-A®
2	Buna-n
3	Neoprene
4	EPDM

3	**OUTLET PRESSURE** *OUTLET GAUGE RANGE IF SUPPLIED)*
1	0-1000 PSIG / 0-68.9 Bar *(0-3000 PSIG GAUGE)*
2	0-1500 PSIG / 0-103.4 Bar *(0-3000 PSIG GAUGE)*
3	0-2000 PSIG / 0-137.9 Bar *(0-3000 PSIG GAUGE)*
4	0-2500 PSIG / 0-172.4 Bar *(0-3000 PSIG GAUGE)*
5	0-200 PSIG / 0-13.8 Bar *(0-400 PSIG GAUGE)*
6	0-250 PSIG / 0-17.24 Bar *(0-400 PSIG GAUGE)*
7	0-500 PSIG / 0-34.47 Bar *(0-1000 PSIG GAUGE)*
4	**MAIN VALVE Cv**
1	Cv 0.08
2	Cv 0.2
5	**GAUGES** *(optional)*
0	No gauges
1	2" diameter inlet & outlet gauges

6	**PANEL MOUNTING NUT** *(optional)*
0	No nut
1	Mounting nut
7	**PORTING CONFIGURATIONS**
A	
B	
8	**MOUNTING HOLES** *(Optional)*
0	None
1	10-32 UNF-2B (2X)

Viton-A® is a registered trademark of E.I.duPont de Nemours and Company
Contact factory for material certifications. Fees may apply.

SINGLE STAGE STABLE SET PRESSURE PISTON SENSED

Pressure Reducing Regulators

2610 SERIES

PREMIER INDUSTRIES

1590 99th Ln NE,
Minneapolis, MN 55449
763-786-4020

MADE IN THE USA

Minneapolis, MN

DESCRIPTION

The Premier 2610 Series single stage regulators are equipped with new patent pending technology that enables increased stability in delivery pressure and a significantly reduced decaying inlet characteristic in a single stage. Premier 2610 Series single stage, piston sensed, pressure reducing regulators feature a max inlet pressure of 3500 PSIG *(241.34 bar)*, outlet pressures up to 2500 PSIG *(172.37 bar)*, and Cv 0.20. Premier 2610 Series regulators are well suited for applications with high outlet pressures from a compressed gas source. Models are available for both corrosive and non-corrosive service featuring a variety of body, & seal options.

FEATURES

- Reduced decaying inlet characteristic
- 3500 PSIG *(241.34 bar)* max inlet pressure
- Outlet pressures up to 2500 PSIG *(172.37 bar)*
- Cv 0.20
- Compact size
- Non-venting
- Machined bar stock body, bonnet, and piston eliminates porosity found in castings
- Economical pricing

The Premier 2610 Series pressure reducing regulator's design is remarkably flexible. Contact Premier Industries for a custom 2610 Series regulator to meet your exact needs.

2610 SERIES

SINGLE STAGE STABLE SET PRESSURE PISTON SENSED

Pressure Reducing Regulators

SPECIFICATIONS

- **MAXIMUM INLET PRESSURE:** 3500 PSIG *(241.34 bar)*
- **CONTROL PRESSURE RANGES:**
  - 0-250 PSIG *(0 - 17.24 bar)*
  - 0-500 PSIG *(0 - 34.47 bar)*
  - 0-1000 PSIG *(0 - 68.95 bar)*
  - 0-1500 PSIG *(0 - 103.42 bar)*
  - 0-2500 PSIG *(0 - 172.37 bar)*
- **FLOW (Cv):** 0.2 max

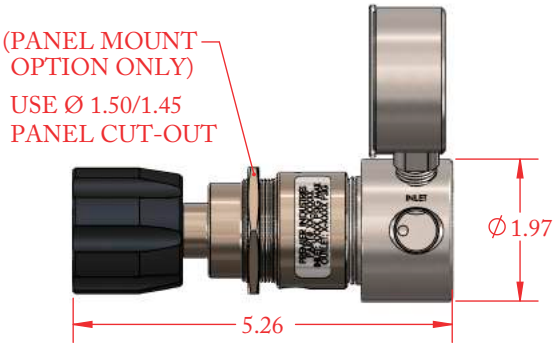

MATERIALS OF CONSTRUCTION

- **BODY OPTIONS:**
  - 316 Stainless Steel
  - 303 Stainless Steel
  - 6061-T6 Aluminum/Hardcoat Anodize*
    **Minimum quantity or lot charges apply to the aluminum, hardcoat option*
- **BONNET:**
  - 6061-T6 Aluminum/Nickel Plated
- **PISTON/PISTON HOUSING:**
  - 316 Stainless Steel
  - 303 Stainless Steel
- **SEALS:**
  - Viton-A®
  - EPDM
  - Neoprene
  - Nitrile
- **VALVE SEAT:** PCTFE
- **OTHER WETTED COMPONENTS:**
  - 300 series stainless steel wetted components
  - All 316 stainless steel wetted components *(316 S.S. body)*
- **GAUGE OPTIONS:**

(Optional, only availablewith 'C' & 'C' porting configurations, see page 3)*
  - 300 series stainless steel wetted components
  - 316 stainless steel wetted components *(316 S.S. body)*

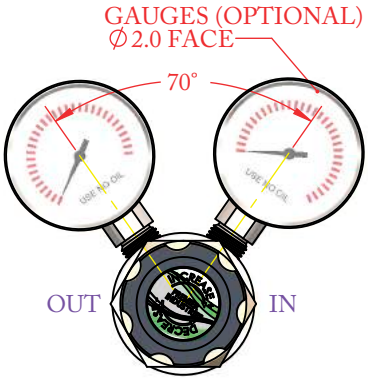

PORTING

- **INLET:**
  - 1/4-18 FNPT
  - 3/8-18 FNPT
- **OUTLET:**
  - 1/4-18 FNPT
  - 3/8-18 FNPT

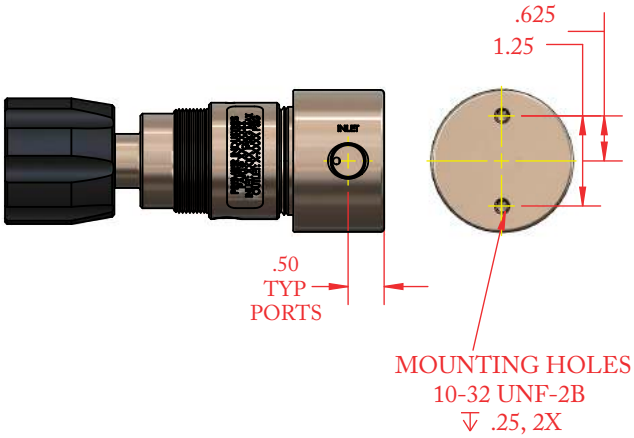

(Part number shown above: 50-12482)

OPTIONS

- Panel mounting nut
- Private label

Viton-A® is a registered trademarks of E.I.duPont de Nemours and Company

SINGLE STAGE STABLE SET PRESSURE PISTON SENSED

Pressure Reducing Regulators

2610 SERIES

PART #	-	1	2	-	3	4	-	5	6	-	7
50-12482	-			-			-			-	

1	BODY MATERIAL *& FINISH*
1	6061-T6 Aluminum, *Hardcoat anodize**
2	303 Stainless Steel, *cleaned per spec #515*
3	316 Stainless Steel, *cleaned per spec #515*

Minimum quantity or lot charges apply to the aluminum, hardcoat option

2	PORTING CONFIGURATIONS
1	S — 1/4 FNPT ports
2	S* — 3/8 FNPT ports
3	C — 1/4 FNPT ports
4	C* — 1/4 FNPT ports *(red)* 3/8 FNPT ports *(blue)*
5	C** — 1/8 FNPT ports *(red)* 1/4 FNPT ports *(blue)*

3	MAIN VALVE SEAT
1	PCTFE

4	O-RING SEALS
1	Nitrile
2	Viton-A®
3	EPDM
4	Neoprene

5	OUTLET PRESSURE *(outlet gauge range, if supplied)*
1	0-250 PSIG / *0-17.24 bar (0-400 psig gauge)*
2	0-500 PSIG / *0-34.47 bar (0-1000 psig gauge)*
3	0-1000 PSIG / *0-68.95 bar (0-1500 psig gauge)*
4	0-1500 PSIG / *0-103.42 bar (0-3000 psig gauge)*
5	0-2500 PSIG / *0-172.37 bar (0-3000 psig gauge)*

6	GAUGES *(available with 'C' & 'C*' porting configurations only)*
1	No gauges
2	Include gauges

7	MOUNTING OPTIONS
1	Bottom mount only
2	Panel mount & bottom mount

Viton-A® is a registered trademark of E.I.duPont de Nemours and Company
Contact factory for material certifications. Fees may apply.

SINGLE STAGE PISTON SENSED SELF-VENTING

Pressure Reducing Regulators

2660 SERIES

PREMIER INDUSTRIES

1590 99th Ln NE,
Minneapolis, MN 55449
763-786-4020

MADE IN THE USA

Minneapolis, MN

DESCRIPTION

The Premier 2660 Series pressure reducing regulators are single stage, piston sensed, self-venting, cylinder and line regulators. Premier 2660 Series regulators feature a max inlet pressure of 3500 PSIG *(241.32 bar)*, control pressures up to 1000 PSIG *(68.95 bar)*, and Cv 0.08, or 0.20. The self venting hole in the bonnet can be captured for use with toxic/corrosive media.

FEATURES

- Captured, self-venting, bonnet vent
- Stainless steel piston/piston housing
- 3500 PSIG *(241.32 bar)* max inlet pressure
- Cv 0.08, or 0.20
- Machined bar stock body, bonnet, and piston eliminates porosity found in castings
- Economical pricing

The Premier 2660 Series pressure reducing regulator's design is remarkably flexible.
Contact Premier Industries for a custom 2660 Series regulator to meet your exact needs.

2660 SERIES

SINGLE STAGE PISTON SENSED SELF-VENTING

Pressure Reducing Regulators

SPECIFICATIONS

- **MAXIMUM INLET PRESSURE:** 3500 PSIG *(241.32 bar)*
- **CONTROL PRESSURE RANGES:**
  - 0-25 PSIG *(0 - 1.72 bar)*
  - 0-50 PSIG *(0 - 3.45 bar)*
  - 0-100 PSIG *(0 - 6.89 bar)*
  - 0-250 PSIG *(0 - 17.24 bar)*
  - 0-500 PSIG *(0 - 34.47 bar)*
  - 0-600 PSIG *(0 - 41.36 bar)*
  - 0-1000 PSIG *(0 - 68.95 bar)*
- **FLOW (Cv):** 0.08, 0.20

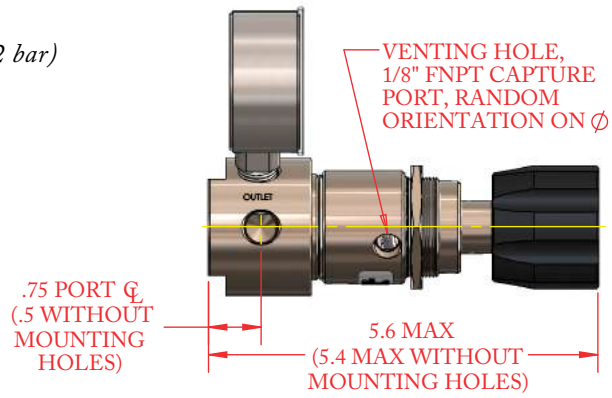

MATERIALS OF CONSTRUCTION

- **BODY OPTIONS:**
  - 303 Stainless Steel
  - 316 Stainless Steel
  - SAE 360 Brass/Nickel Plated
- **BONNET *(NON-WETTED)*:**
  - SAE 360 Brass/Nickel Plated
- **PISTON/PISTON HOUSING:**
  - 303 Stainless Steel
- **MAIN VALVE SEAT:** PCTFE
- **MAIN VALVE CARTRIDGE SEAL:**
  - PTFE
- **O-RING OPTIONS:**
  - Viton-A®
  - Nitrile
  - EPDM
  - Neoprene
  - *Contact factory for other options*
- **VENT VALVE/VENT SEAT RETAINER:**
  - 303 Stainless Steel

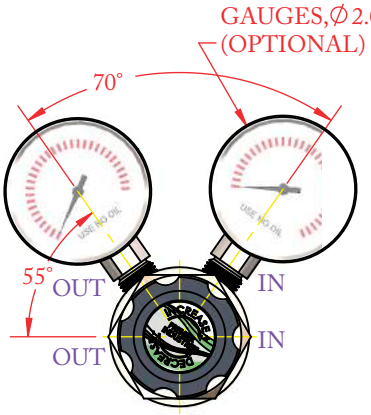

CONFIGURATION 50-12539-2X-XX-11-11 SHOWN

PORTING

- **INLET:**
  - 1/4" FNPT
  - AS5202-04
- **OUTLET:**
  - 1/4" FNPT
  - AS5202-04
- **VENTING HOLE:**
  - 1/8" FNPT

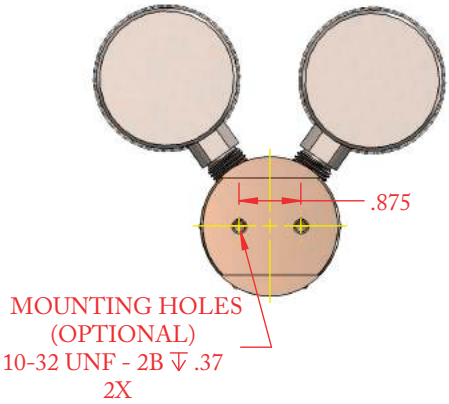

OPTIONS

- Panel mounting nut (6061-T6 Aluminum/Nickel Plated)
- Gauges
- Mounting holes
- Private label

(Part number shown above: 50-12539)

Viton-A ® is a registered trademark of E.I.duPont de Nemours and Company

2660 SERIES

SINGLE STAGE PISTON SENSED SELF-VENTING

Pressure Reducing Regulators

PART #	-	1	2	-	3	4	-	5	6	-	7	8
50-12539	-			-			-			-		

1	BODY MATERIAL *& FINISH*
1	316 Stainless Steel, *cleaned per spec #515*
2	303 Stainless Steel, *cleaned per spec #515*
3	SAE 360 Brass, *Nickel Plated*
2	**O-RING SEALS**
0	Nitrile
1	Viton-A®
5	EPDM
6	Neoprene

3	OUTLET PRESSURE
1	0-25 PSIG *(0-1.72 Bar)*
2	0-50 PSIG *(0-3.45 Bar)*
3	0-100 PSIG *(0-6.89 Bar)*
4	0-250 PSIG *(0-17.24 Bar)*
5	0-500 PSIG *(0-34.47 Bar)*
6	0-600 PSIG *(0-41.36 Bar)*
9	0-1000 PSIG *(0-68.95 Bar)*
4	**MAIN VALVE Cv**
1	Cv 0.08
2	Cv 0.20
5	**GAUGES** *(optional)*
0	No gauges
1	Include gauges* **Gauges not available on 'S' porting configuration*

6	PANEL MOUNTING NUT *(optional)*
0	No nut
1	Include mounting nut
7	**PORTING CONFIGURATIONS**
1	*('C' configuration 1/4" FNPT, 4X)*
2	*('S' configuration 1/4" FNPT, 2X)*
3	*('C*' configuration AS5202-04, 4X)*
8	**MOUNTING HOLES** *(optional)*
0	None
1	10-32 UNF-2B (2X)

Viton-A® is a registered trademark of E.I.duPont de Nemours and Company
Contact factory for material certifications. Fees may apply.

FIXED FLOW PISTON SENSED

Pressure Reducing Regulators

2700 SERIES

PREMIER INDUSTRIES

1590 99th Ln NE,
Minneapolis, MN 55449
763-786-4020

MADE IN THE USA

Minneapolis, MN

DESCRIPTION

Compact, piston sensed, fixed flow, pressure reducing regulators used for calibration gases and industrial hygiene monitors. Premier 2700 Series regulators are available with preset flow settings from 0.25 LPM to 9.0 LPM; they are offered in a wide variety of materials and configurations, enabling them to regulate a broad range of media. Flows are set using a unique integrated flow adjustment valve prior to shipment. Dependent upon the configuration of the regulator, Premier 2700 Series regulators are designed to handle inlet pressures up to 3000 PSIG *(206.84 bar)*.

FEATURES

- Compact size
- Factory preset flow settings from 0.25 liters/min to 9.0 liters/min
- Wide variety of shut-off valve options
- 3000 PSIG *(206.84 bar)* max inlet *(dependent upon configuration)*
- Multiple porting options
- Models are available for both corrosive and non-corrosive service in a variety of materials
- Machined bar stock body, and bonnet eliminates porosity found in castings
- Numerous optional features and configurations are available.
- Economical pricing

The Premier 2700 Series pressure reducing regulator's design is remarkably flexible. Contact Premier Industries for a custom 2700 Series regulator to meet your exact needs.

2700 SERIES

FIXED FLOW PISTON SENSED

Pressure Reducing Regulators

SPECIFICATIONS

- **MAXIMUM INLET PRESSURE:** 3000 PSIG *(206.84 bar)*
  (dependent upon configuration)
- **STANDARD PRESET CONTROL PRESSURE:**
  - 40-60 PSIG *(2.76 - 4.14 bar)*
  - Other preset control pressures optional
- **LEAK RATE:** Bubble Tight
- **SHUT OFF VALVE OPTIONS:** *(see page 3)*
  - None
  - Rotary/Multi-turn
  - Bayonet/Toggle
  - Slide valve
  - Trigger
  - Push Button
  - Solenoid
- **FLOW (Cv):** Preset to customer specifications from 0.25-9.0 LPM *(at factory or inventory location)*

PORTING

- **INLET PORTING:**
  - C10 (5/8-18 UNF)
  - 1/8" FNPT
  - 1/8" MNPT,
  - 1/4" FNPT
  - 1/4" MNPT
  - All CGA Connections Available:
    – CGA 165, 180, 320, 510, 580, 600, etc.
- **OUTLET PORTING:**
  - 3/16" Hose Barb
  - 1/4" hose barb
  - 1/8" FNPT
  - 1/8" MNPT
  - 1/4" FNPT
  - 1/4" MNPT

MATERIALS OF CONSTRUCTION

- **BODY OPTIONS:**
  - SAE 360 Brass
  - SAE 360 Brass, Electroless Nickel Plated
  - 303 Stainles Steel
  - 316 Stainless Steel
  - 6061-T6 Aluminum, Clear Anodized
- **BONNET OPTIONS:**
  - 6061-T6 Aluminum, Clear Anodized
  - SAE 360 Brass
  - SAE 360 Brass, Electroless Nickel Plated
- **PISTON:**
  - SAE 360 Brass
  - 303 Stainles Steel
  - 316 Stainless
  - 6061-T6 Aluminum, Clear Anodized
- **PISTON SEALS:**
  - Viton-A®
  - All elastomers available
- **VALVE SEAT:** PTFE

OPTIONS

- Gauges (1/8 FNPT Porting): inlet, outlet, or both
- Yoke style CGA connection
- Inlet shut off/metering valve
- Relief valve
- Seat and sealing materials
- Anodized colors for aluminum bodies and bonnets
- Private label

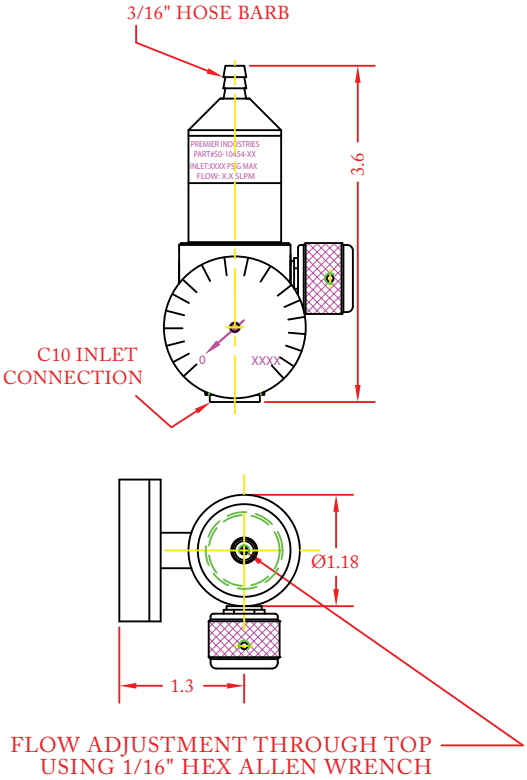

(Part Number: 50-10454 shown above)

Viton® is a registered trademark of E.I.duPont de Nemours and Company

FIXED FLOW PISTON SENSED
Pressure Reducing Regulators

2700 SERIES

PREMIER FIXED FLOW REGULATOR STYLES

ROTARY VALVE

Part #: 50-10454 shown above

TOGGLE STYLE VALVE

Part #: 50-10482 shown above

SLIDE VALVE

Part #: 50-10809 shown above

PUSH BUTTON VALVE

Part #: 50-10619 shown above

TRIGGER STYLE VALVE

Part #: 50-10554 shown above

YOKE STYLE CGA

Part #: 50-12202 shown above

TOGGLE STYLE VALVE

Part #: 50-12085 shown above

SOLENOID OUTLET CONTROL

Part #: 50-11742 shown above

PUSH CONNECT

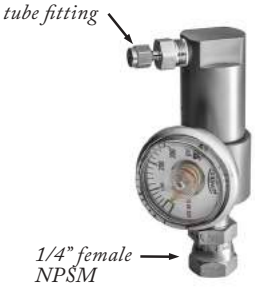

Part #: Contact for details

COMPACT, ECONOMICAL FIXED FLOW PISTON SENSED

Pressure Reducing Regulators

2701 SERIES

PREMIER INDUSTRIES

1590 99th Ln NE,
Minneapolis, MN 55449
763-786-4020

MADE IN THE USA

Minneapolis, MN

DESCRIPTION

The Premier Industries 2701 Series regulator is a fixed flow, piston sensed regulator, in a compact economical package; a reliable and cost-effective solution for specialty gas, and transportable cylinder applications. Premier 2701 Series regulators are available with preset flow settings from 0.1 LPM to 4.0 LPM; they are offered in a variety of materials and configurations for smooth integration into your application. Flows are set using a unique integrated flow adjustment valve prior to shipment. Dependent upon the configuration of the regulator, Premier 2701 Series regulators are designed to handle inlet pressures up to 3000 PSIG *(206.84 bar)*.

FEATURES

- Compact size, economical pricing
- Factory preset flow settings from 0.1 liters/min to 4.0 liters/min
- Optional integrated shut-off valve
- 3000 PSIG *(206.84 bar)* max inlet *(dependent upon configuration)*
- Multiple porting options
- Suited for calibration gases & industrial hygiene monitors
- Models are available for both corrosive and non-corrosive service in a variety of materials
- Machined bar stock body, and bonnet eliminates porosity found in castings

The Premier 2701 Series pressure reducing regulator's design is remarkably flexible. Contact Premier Industries for a custom 2701 Series regulator to meet your exact needs.

2701 SERIES

COMPACT, ECONOMICAL FIXED FLOW PISTON SENSED

Pressure Reducing Regulators

SPECIFICATIONS

- **MAXIMUM INLET PRESSURE:**
  - 3000 PSIG *(206.84 bar), 1/4" FNPT inlet*
  - 1500 PSIG *(103.42 bar), C10 (5/8-18 unf) inlet*
  - 500 PSIG *(34.47 bar), CGA 600 inlet*
- **STANDARD PRESET CONTROL PRESSURE:**
  - 40-80 psig *(2.76 - 5.52 bar)*
- **PRESET FLOW SETTING:**
  - Preset to customer specifications from 0.1-4.0 SLPM *(at factory or inventory location)*
- **FLOW (Cv):** 0.005 max
- **WEIGHT:** 0.35 lb./0.16 kg *(SAE 360 brass, C10 w/ rotary shut-off)*

OPTIONS

- Gauges, gauge internals equivalent to process wetted materials
- Integrated shut-off valve
- Private label

MATERIALS OF CONSTRUCTION

- **PROCESS WETTED MATERIALS:**
  - SAE 360 Brass
  - 6061-T6 Aluminum, Clear Anodized

(Other materials available upon request ie: SAE 360 Brass/Bright Dipped, 316 Stainless Steel, 303 Stainless Steel)

- **O-RING MATERIAL OPTIONS:**
  - Buna-N
  - Viton-A®
  - EPDM
  - Neoprene
  - *Other elastomers available upon request*
- **VALVE SEAT:** PTFE

PORTING

- **INLET PORTING:**
  - C10 (5/8-18 UNF)
  - 1/4" FNPT
  - 1/8" FNPT
  - *Compatible CGA connections available upon request:*
  - *– CGA 165, 180, 320, 510, 580, 600, etc.*
- **OUTLET PORTING:**
  - 3/16" Hose Barb
  - 1/4" Hose Barb
  - 1/4", 1/8" FNPT
  - 1/4", 1/8" MNPT

Viton® is a registered trademark of E.I.duPont de Nemours and Company

COMPACT, ECONOMICAL FIXED FLOW PISTON SENSED

Pressure Reducing Regulators

2701 SERIES

(P/N 50-12641-21XX shown above with C10 inlet)

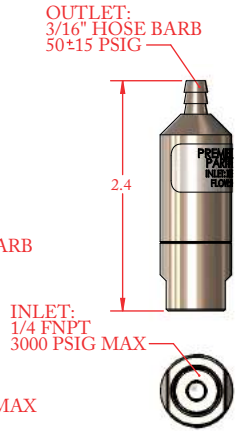

(P/N 50-12641-11XX shown above with 1/4" FNPT inlet)

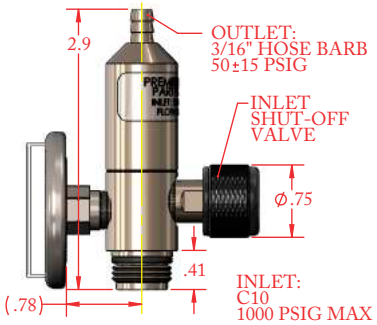

(P/N 50-12640-21XX shown above with C10 inlet)

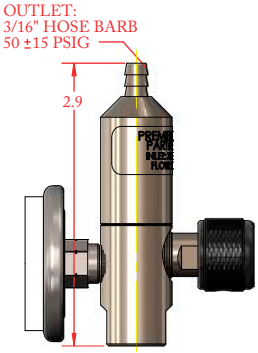

(P/N 50-12640-11XX shown above with 1/4" FNPT inlet)

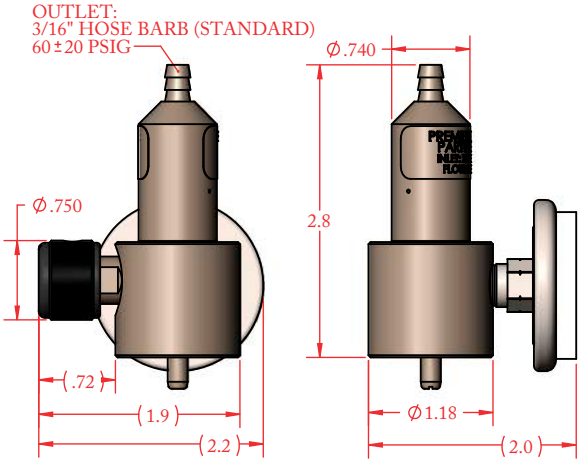

(P/N 50-12727 shown above with CGA 600 inlet)

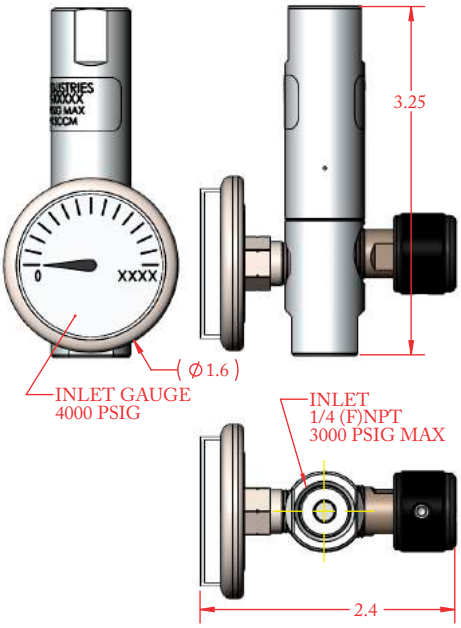

(50-13188-12XX shown above with 1/4" FNPT inlet and 1/4" FNPT outlet)

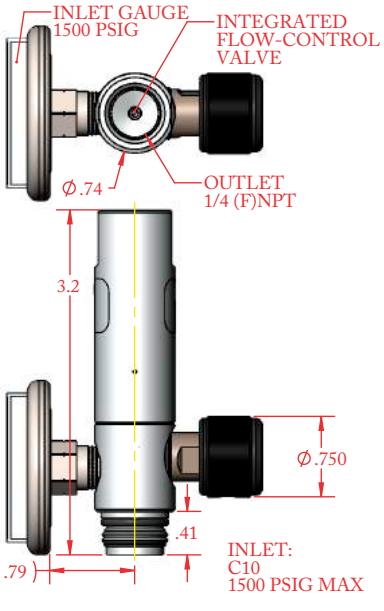

(50-13188-22XX shown above with C10 inlet and 1/4" FNPT outlet)

2701 SERIES

COMPACT, ECONOMICAL FIXED FLOW PISTON SENSED

Pressure Reducing Regulators

REGULATORS, VALVES, AND TORCHES
PREMIER INDUSTRIES
MINNEAPOLIS • MINNESOTA • USA

C10 OR FNPT INLET, HOSE BARB OUTLET, NO GAUGE OR SHUT-OFF VALVE

PART #	-	1	2	3	4	-	5 . 6
50-12641	-					-	

1	REGULATOR INLET
1	1/4" FNPT *(3000 psig max / 206.84 bar max)*
2	C10 *(1500 psig max / 103.42 bar max)*
2	**REGULATOR OUTLET**
1	3/16" hose barb
Other outlets available upon request (see page 2)	
3	**PROCESS WETTED MATERIALS**
1	SAE 360 Brass, Nickel Plated
Other materials available upon request	

4	O-RING MATERIALS
1	BUNA-N
2	VITON-A®
3	EPDM
4	NEOPRENE
Other elastomers available upon request	
5 . 6	**PRESET FLOW SETTING**
Specify flow setting in slpm. nitrogen gas (0.1-4.0 slpm range, 0.1 slpm resolution)	

Viton® is a registered trademark of E.I.duPont de Nemours and Company
Contact factory for material certifications. Fees may apply.

2701 SERIES

COMPACT, ECONOMICAL FIXED FLOW PISTON SENSED

Pressure Reducing Regulators

REGULATORS, VALVES, AND TORCHES
PREMIER INDUSTRIES
MINNEAPOLIS • MINNESOTA • USA

CGA 600 INLET, HOSE BARB OUTLET, INTEGRATED GAUGE AND SHUT-OFF VALVE

PART #	-	1	2	3	-	4 . 5
50-12727	-				-	

1	REGULATOR OUTLET
1	3/16" hose barb
Other outlets available upon request (see page 2)	
2	**PROCESS WETTED MATERIALS**
1	SAE 360 Brass, Nickel Plated
Other materials available upon request	

3	O-RING MATERIALS
1	BUNA-N
2	VITON-A®
3	EPDM
4	NEOPRENE
Other elastomers available upon request	
4 . 5	**PRESET FLOW SETTING**
Specify flow setting in slpm. nitrogen gas (0.1-4.0 slpm range, 0.1 slpm resolution)	

Teflon® and Viton® are registered trademarks of E.I.duPont de Nemours and Company

COMPACT, ECONOMICAL FIXED FLOW PISTON SENSED

Pressure Reducing Regulators

2701 SERIES

C10 OR FNPT INLET, HOSE BARB OUTLET, INTEGRATED GAUGE AND SHUT OFF VALVE

PART #	-	1	2	3	4	-	5 . 6
50-12640	-					-	

1	REGULATOR INLET
1	1/4" FNPT *(3000 psig max / 206.84 bar max)*
2	C10 *(1500 psig max / 103.42 bar max)*
2	**REGULATOR OUTLET**
1	3/16" hose barb
Other outlets available upon request (see page 2)	
3	**PROCESS WETTED MATERIALS**
1	SAE 360 Brass, Nickel Plated
2	6061-T6 Aluminum, Clear Anodized

4	O-RING MATERIALS
1	BUNA-N
2	VITON-A®
3	EPDM
4	NEOPRENE
Other elastomers available upon request	
5 . 6	**PRESET FLOW SETTING**
Specify flow setting in slpm. nitrogen gas (0.1-4.0 slpm range, 0.1 slpm resolution)	

Viton® is a registered trademark of E.I.duPont de Nemours and Company
Contact factory for material certifications. Fees may apply.

COMPACT, ECONOMICAL FIXED FLOW PISTON SENSED

Pressure Reducing Regulators

2701 SERIES

C10 OR FNPT INLET, FNPT OUTLET, INTEGRATED GAUGE AND SHUT OFF VALVE

PART #	-	1	2	3	4	-	5 . 6
50-13188	-					-	

1	REGULATOR INLET
1	1/4" FNPT *(3000 psig max / 206.84 bar max)*
2	C10 *(1500 psig max / 103.42 bar max)*
2	**REGULATOR OUTLET**
2	1/4" FNPT
3	**BODY/BONNET MATERIALS**
1	SAE 360 Brass, Nickel Plated
2	6061-T6 Aluminum, Clear Anodized

4	O-RING MATERIALS
1	BUNA-N
2	VITON-A®
3	EPDM
4	NEOPRENE
Other elastomers available upon request	
5 . 6	**PRESET FLOW SETTING**
Specify flow setting in slpm. nitrogen gas (0.1-4.0 slpm range, 0.1 slpm resolution)	

Viton® is a registered trademark of E.I.duPont de Nemours and Company
Contact factory for material certifications. Fees may apply.

MICRO PISTON SENSED
Pressure Reducing Regulators

2780 SERIES

PREMIER INDUSTRIES

1590 99th Ln NE,
Minneapolis, MN 55449
763-786-4020

(Part #: 50-11519)

(Part #: 50-11022)

MADE IN THE USA
Minneapolis, MN

DESCRIPTION

Miniature, economical, piston-sensed, fixed flow, pressure reducing regulators. Premier 2780 Series regulators are used where size, weight, and cost are important. These light-weight, compact regulators feature a fixed flow rate that is factory preset between 0.25 LPM - 9.0 LPM *(or unrestricted)*. The 2780 Series regulators shown above are all aluminum, simple and dependable.

FEATURES

- Extremely compact & light-weight
- Factory preset flow settings from 0.25 liters/min to 7.0 liters/min or unrestricted
- Machined bar stock body, and bonnet eliminates porosity found in castings
- Numerous optional features are available.
- Economical pricing

The Premier 2780 Series pressure reducing regulator's design is remarkably flexible.
Contact Premier Industries for a custom 2780 Series regulator to meet your exact needs.

2780 SERIES

MICRO PISTON SENSED
Pressure Reducing Regulators

SPECIFICATIONS

- **MAXIMUM INLET PRESSURE:**
  (Dependent on inlet connection)
  - *P/N: 50-11095: 1000 psig (68.95 bar)*
  - *P/N: 50-11022: 400 psig (27.58 bar)*
  - *P/N: 50-11080: 500 psig (34.47 bar)*
  - *P/N: 50-11519: 500 psig (34.47 bar)*
- **STANDARD PRESET CONTROL PRESSURE:**
  - 50/60 PSIG
  - Other preset control pressures optional
- **FLOW (Cv):** Factory preset Cv 0.25-7.0 LPM *(dependent on comfiguration)*
- **WEIGHT:** ~ 0.05 - 0.10 lbs.

MATERIALS OF CONSTRUCTION

- **BODY OPTIONS:**
  - 6061-T6 Aluminum, Clear Anodized
  - SAE 360 Brass *(50-11022 only)*
  - 303 Stainless Steel *(50-11022 only)*
- **BONNET OPTIONS:**
  - 6061-T6 Aluminum, Clear Anodized
  - SAE 360 Brass *(50-11022 only)*
  - 303 Stainless Steel *(50-11022 only)*
- **PISTON:**
  - 303 Stainless Steel
- **SEALS:**
  - Viton®
  - Numerous other compounds available upon request
- **VALVE SEAT:** PTFE

PORTING

- **INLET PORTING OPTIONS:**
  - C10 (5/8-18 UNF)
  - CGA 600
  - #10-32 UNF (Female)
- **OUTLET PORTING OPTIONS:**
  - 3/16" Hose Barb
  - #10-32 UNF (Female)

OPTIONS

- Anodized Colors for Aluminum Bodies and Bonnets
- Private Label

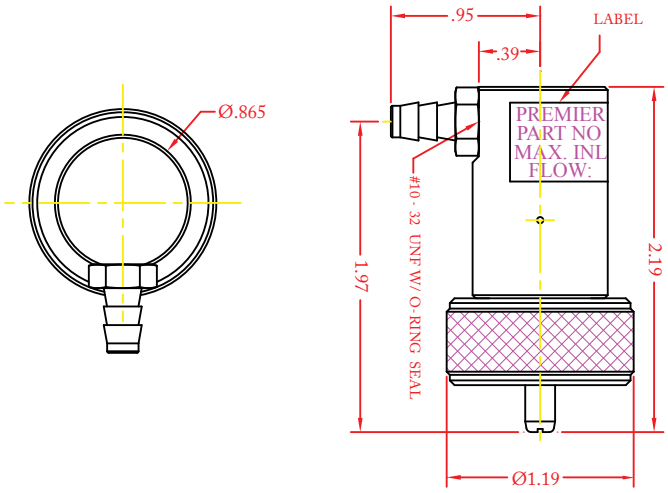

(Part Number 50-11080 shown above)

Viton® is a registered trademark of E.I.duPont de Nemours and Company
Contact factory for material certifications. Fees may apply.

MICRO PISTON SENSED

Pressure Reducing Regulators

2790 SERIES

PREMIER INDUSTRIES

1590 99th Ln NE,
Minneapolis, MN 55449
763-786-4020

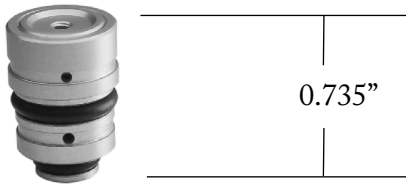

MADE IN THE USA

Minneapolis, MN

DESCRIPTION

Miniature, economical, piston-sensed, fixed flow, pressure reducing, manifold regulators. 2790 Series regulators are designed drop into a manifold housing, minimizing volume. Premier 2790 Series regulators are rated for inlet pressures up to 3000 psig *(206.84 bar)* and Cv 0.0025. Offered in both single stage and two stage designs.

FEATURES

- Compact size
- Max Inlet: 1500 psig *(103.42 bar)* or 3000 psig *(206.84 bar)*
- Cv: 0.0025
- Single stage and two stage designs available
- Economical pricing
- Machined bar stock body eliminates porosity found in castings

The Premier 2790 Series pressure reducing regulator’s design is remarkably flexible.
Contact Premier Industries for a custom 2790 Series regulator to meet your exact needs.

2790 SERIES

MICRO PISTON SENSED

Pressure Reducing Regulators

SPECIFICATIONS

- **MAXIMUM INLET PRESSURE OPTIONS:**
  - 1500 psig *(103.42 bar)* max
  - 3000 psig *(206.84 bar)* max
- **PRESET CONTROL PRESSURE OPTIONS:**
  - 30 PSIG *(2.07 bar)*
  - 45 PSIG *(3.10 bar)*
  - 150 PSIG *(10.34 bar)*
  - 250 PSIG *(17.24 bar)*
  - 500 PSIG *(34.47 bar) (50-11398 only)*
- **FLOW (Cv):** 0.0025
- **WEIGHT:** ~ 0.05 lbs.

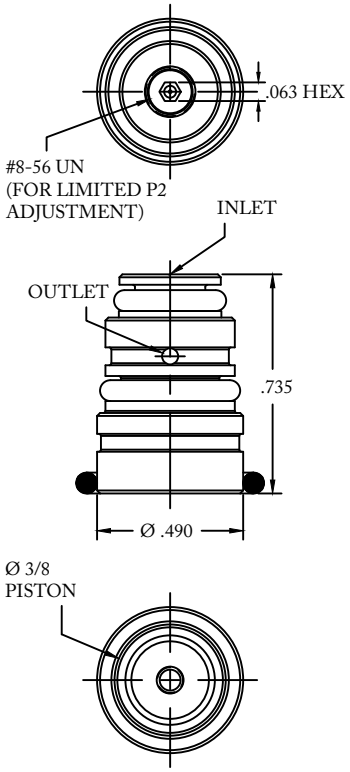

(Single Stage Part Number: 50-11398 shown above)

MATERIALS OF CONSTRUCTION

- **BODY OPTIONS:**
  - 6061-T6 Aluminum
  - 316 Stainless Steel
  - 303 Stainless Steel *(50-12938 only)*
  - Titanium TI-6AL-4V
- **PISTON:**
  - 6061-T6 Aluminum
  - 303 Stainless Steel
  - 316 Stainless Steel *(50-12938 only)*
  - Titanium TI-6AL-4V
- **PISTON SEAT:**
  - PTFE
- **O-RING SEAL OPTIONS:**
  - Buna-N
  - Viton®
  - EPDM
- **BACK-UP RINGS:**
  - PCTFE

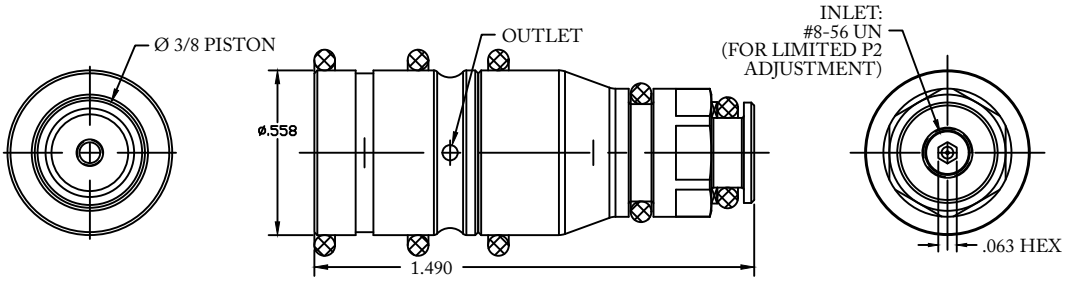

(Two Stage Part Number: 50-12938 shown above)

Viton® are registered trademarks of E.I.duPont de Nemours and Company

MICRO PISTON SENSED
Pressure Reducing Regulators

2790 SERIES

SINGLE STAGE 2790

PART #	1 2	-	3	4	-	5 6
50-11398		-			-	

1 2	TYPE
BLANK	Standard (1500 psig max)
HP	High pressure (3000 psig max)
3	**MATERIAL**
0	6061-T6 Aluminum
1	Stainless Steel
5	Titanium TI-6AL-4V
4	**OUTLET PRESSURE**
0	500 PSIG *(34.47 bar)*
1	150 PSIG *(10.34 bar)*
2	45 PSIG *(3.10 bar)*
3	30 PSIG *(2.07 bar)*

5 6	O-RING MATERIAL
00	Buna-n
02	Viton-A®
05	EPDM

Viton® is a registered trademark of E.I.duPont de Nemours and Company.

2790 SERIES

MICRO PISTON SENSED
Pressure Reducing Regulators

TWO STAGE 2790

PART #	1 2	-	3	4	-	5 6
50-12938		-			-	

1 2	TYPE
BLANK	Standard (1500 psig max)
HP	High pressure (3000 psig max)

3	MATERIAL
0	6061-T6 Aluminum
1	316 Stainless Steel
2	303 Stainless Steel
5	Titanium TI-6AL-4V

4	OUTLET PRESSURE
A	250 PSIG *(17.24 bar)*
0	500 PSIG *(34.47 bar)*
1	150 PSIG *(10.34 bar)*
2	45 PSIG *(3.10 bar)*
3	30 PSIG *(2.07 bar)*

5 6	O-RING MATERIAL
00	Buna-n
02	Viton-A®
05	EPDM

Viton® is a registered trademark of E.I.duPont de Nemours and Company.

HIGH FLOW DIAPHRAGM SENSED
Pressure Reducing Regulators

2800N SERIES

PREMIER INDUSTRIES

1590 99th Ln NE,
Minneapolis, MN 55449
763-786-4020

MADE IN THE USA
Minneapolis, MN

DESCRIPTION

Premier 2800N Series regulators are high flow, single stage, pressure reducing regulators with a balanced stem for increased outlet pressure stability. These diaphragm sensed, high flow regulators are designed for inlet pressures up to 3000 PSIG *(206.84 bar)*, and Cv 1.0 or 2.0. Premier 2800N Series regulators are used to regulate to a broad range of non corrosive and corrosive media (based on materials of construction).

FEATURES

- Significantly reduced supply pressure effect / increased stability in outlet pressure
- Flow capacity (Cv): 1.0, 2.0
- Neoprene diaphragm *(fabric reinforced)*
- Non-venting
- Machined bar stock body eliminates porosity found in castings
- Very competitive pricing

The Premier 2800N Series pressure reducing regulator's design is remarkably flexible.
Contact Premier Industries for a custom 2800N Series regulator to meet your exact needs.

2800N SERIES

HIGH FLOW DIAPHRAGM SENSED
Pressure Reducing Regulators

SPECIFICATIONS

- **MAXIMUM INLET PRESSURE:** 3000 PSIG *(206.84 bar)*
- **CONTROL PRESSURE RANGES:**
  - 0-10 PSIG *(0 - 0.69 bar)*
  - 0-15 PSIG *(0 - 1.03 bar)*
  - 0-40 PSIG *(0 -2.76 bar)*
  - 0-100 PSIG *(0 - 6.89 bar)*
  - 0-150 PSIG *(0 - 10.34 bar)*
- **FLOW (Cv):** 1.0, 2.0

MATERIALS OF CONSTRUCTION

- **BODY:**
  - SAE 360 Brass/Bright Dip
  - SAE 360 Brass/Nickel Plated
  - 6061-T6 Aluminum/Nickel Plated
  - 303 Stainless Steel
- **BONNET:**
  - 6061-T6 Aluminum/Nickel Plated
- **DIAPHRAGM:**
  - Neoprene *(fabric reinforced)*
- **MAIN VALVE SEAT:**
  - PCTFE
- **RELIEF VALVE *(OPTIONAL)*:**
  - Brass with silicone seal

PORTING

- **INLET:**
  - 1/2-14 FNPT
  - 1/4-18 FNPT
- **OUTLET:** *(1 or 2 outlets)*
  - 1/2-14 FNPT
  - 1/4-18 FNPT

OPTIONS

- Gauges
- Relief Valve
- Private Label
- Panel Mounting Nut(s) *(1 or 2)*
  (P/N: 50-11355, order separately)

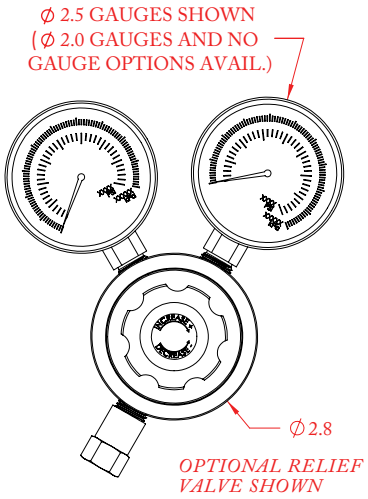

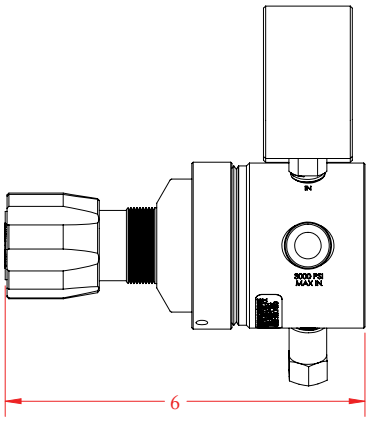

(Part number 50-12056 shown above)

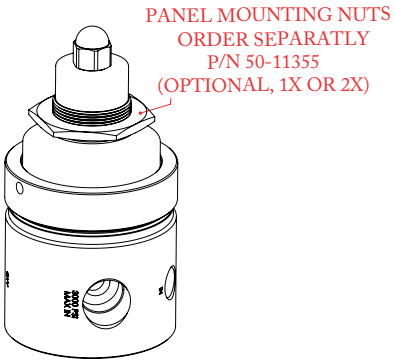

(Part number 50-12056-3X-X2-XX-02 shown above)

HIGH FLOW DIAPHRAGM SENSED
Pressure Reducing Regulators

2800N SERIES

PART #	-	1	2	-	3	4	-	5	6	-	7	8
50-12056	-			-			-			-		

1	BODY MATERIAL *& FINISH*
1	SAE 360 Brass, *Bright Dip*
2	SAE 360 Brass, *Nickel Plated*
3	6061-T6 Aluminum, *Nickel Plated*
4	303 Stainless Steel, *cleaned per spec #515*
2	**DIAPHRAGM / SEALS**
1	Neoprene
3	**MAIN VALVE SEAT**
1	PCTFE
4	**RELIEF VALVE / PORTING**
1	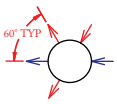 **Relief valve included,** 1/4 FNPT ports *(red)* 1/2 FNPT ports *(blue)* *"I*" porting*
2	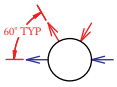 **No relief valve,** 1/4 FNPT ports *(red)* 1/2 FNPT ports *(blue)* *"C" porting*
3	**No relief valve,** 3/4 FNPT ports *"S" porting*

5	OUTLET PRESSURE
1	0-10 PSIG / *0-0.69 bar*
2	0-15 PSIG / *0-1.03 bar*
3	0-40 PSIG / *0-2.76 bar*
4	0-100 PSIG / *0-6.89 bar*
5	0-150 PSIG / *0-10.34 bar*
6	**MAIN VALVE Cv**
1	Cv 1.0
2	Cv 2.0
7	**GAUGES**
0	None
1	Ø 2.0"
2	Ø 2.5"

8	HAND KNOB / ACORN NUT *(PRESET)*
1	Hand knob
2	Preset outlet ** *(tamper resistant acorn nut)*

****TAMPER RESISTANT ACORN NUT**

THE END USER IS RESPONSIBLE TO SPECIFY A PRESET OUTLET PRESSURE. IF AN OUTLET PRESSURE IS NOT SPECIFIED, THE PRESSURE WILL BE LEFT UNSET. NEVER EXCEED THE MAXIMUM OUTLET PRESSURE SPECIFIED ON THE PART NUMBER.

Contact factory for material certifications. Fees may apply.

HIGH FLOW DIAPHRAGM SENSED

Pressure Reducing Regulators

2800S SERIES

PREMIER INDUSTRIES

1590 99th Ln NE,
Minneapolis, MN 55449
763-786-4020

MADE IN THE USA

Minneapolis, MN

DESCRIPTION

Premier 2800S Series single stage, high flow, diaphragm sensed, variable delivery pressure regulators, are designed for inlet pressures up to 3000 PSIG *(206.84 bar)*, and Cv 1.0 or 2.0. Premier 2800S Series regulators feature a stainless steel diaphragm to minimize off-gassing, and a balanced stem for increased outlet pressure stability. Available for use with a broad range of non-corrosive and corrosive media (based on materials of construction).

FEATURES

- Stainless steel diaphragm minimizes off-gassing
- Balanced stem for increased outlet pressure stability
- Flow capacity (Cv): 1.0, or 2.0
- Optional relief valve
- Optional panel mounting nut
- Non-venting
- Very competitive pricing
- Machined bar stock body eliminates porosity found in castings

The Premier 2800S Series pressure reducing regulator's design is remarkably flexible.
Contact Premier Industries for a custom 2800S Series regulator to meet your exact needs.

2800S SERIES

HIGH FLOW DIAPHRAGM SENSED

Pressure Reducing Regulators

SPECIFICATIONS

- **MAXIMUM INLET PRESSURE:** 3000 PSIG *(206.84 bar)*
- **CONTROL PRESSURE RANGES:**
  - 0-10 PSIG *(0 - 0.69 bar)*
  - 0-25 PSIG *(0 - 1.72 bar)*
  - 0-50 PSIG *(0 - 3.45 bar)*
  - 0-100 PSIG *(0 - 6.89 bar)*
  - 0-150 PSIG *(0 - 10.34 bar)*
- **FLOW (Cv):** 1.0 or 2.0

MATERIALS OF CONSTRUCTION

- **BODY:**
  - 316 Stainless Steel
  - SAE 360 Brass/Bright Dip
  - SAE 360 Brass/Nickel Plated
  - 6061-T6 Aluminum/Clear Anodized
- **BONNET:**
  - SAE 360 Brass/Nickel Plated
  - 6061-T6 Aluminum/Nickel Plated
  - 6061-T6 Aluminum/Clear Anodized
- **DIAPHRAGM:**
  - 316 Stainless Steel
- **MAIN VALVE SEAT:**
  - Vespel®
  - PCTFE
- **VALVE SHAFT SEAL:** Viton-A®
- **DIAPHRAGM SEAL:** PTFE

PORTING

- **STANDARD INLET:**
  - 1/2-14 FNPT
- **STANDARD OUTLET:**
  - 1/2-14 FNPT
- **OPTIONAL INLETS:**
  - 1/4 FNPT
  - 3/8 FNPT
- **OPTIONAL OUTLETS:**
  - 1/4 FNPT
  - 3/8 FNPT

OPTIONS

- Gauges
- Relief Valve
- Private Label
- Panel Mounting Nut

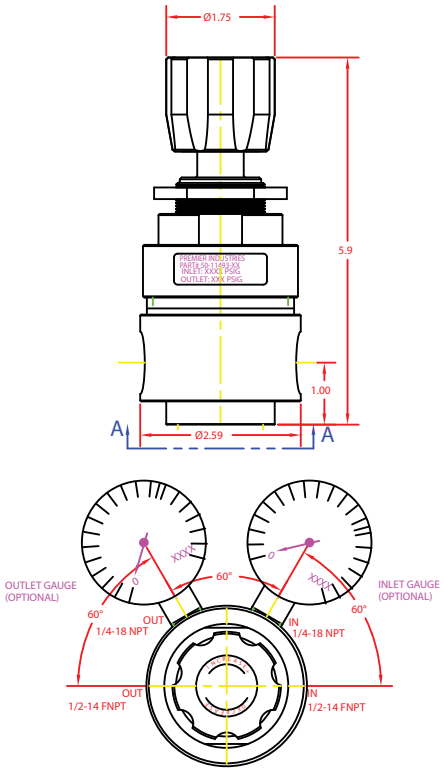

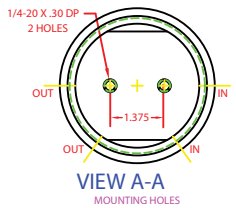

(Part number: 50-11493 shown with standard porting)

Vespel® and Viton-A® are registered trademarks of E.I.duPont de Nemours and Company

HIGH FLOW DIAPHRAGM SENSED

Pressure Reducing Regulators

2800S SERIES

PART #	-	1	2	3	4	5	6
50-11493	-						

1	BODY MATERIALS & FINISH
2	316 Stainless Steel, Cleaned per spec #515
3	6061-T6 Aluminum, Clear Anodized
5	SAE 360 Brass, Nickel Plated
8	SAE 360 Brass, Bright Dip

2	OUTLET PRESSURE *(Outlet gauge range if supplied)*
0	0-10 psig / 0-0.69 bar *(per application)*
1	0-25 psig / 0-1.72 bar *(0-60 psig gauge)*
2	0-50 psig / 0-3.45 bar *(0-100 psig gauge)*
3	0-100 psig / 0-6.89 bar *(0-160 psig gauge)*
4	0-150 psig / 0-10.34 bar *(0-400 psig gauge)*

3	GAUGES *(Optional)*
Blank	none *(standard)*
B	2" diameter outlet only, stainless steel wetted gauge
C	2" diameter inlet & outlet, stainless steel wetted gauges
E	2" diameter outlet only, SAE 360 brass wetted gauge
F	2" diameter inlet & outlet, SAE 360 brass wetted gauges
H	2" diameter outlet only, SAE 360 brass wetted/ chrome plated gauge
J	2" diameter inlet & outlet, SAE 360 brass wetted/ chrome plated gauges

4	PANEL MOUNTING NUT *(Optional)*
5	Mounting nut
8	No nut *(standard)*

5	PORTING OPTIONS
Blank	*Standard porting*
R	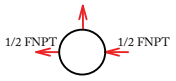
S	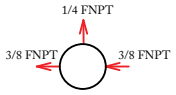
T	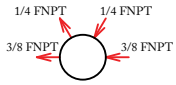

6	MAIN VALVE Cv
Blank	Cv 1.0 main valve *(standard)*
Z	Cv 2.0 main valve

HIGH FLOW PISTON SENSED

Pressure Reducing Regulators

2800P SERIES

PREMIER INDUSTRIES

1590 99th Ln NE,
Minneapolis, MN 55449
763-786-4020

MADE IN THE USA

Minneapolis, MN

DESCRIPTION

Premier 2800P Series regulators are single stage regulators with a balanced stem for increased outlet pressure stability. These piston sensed, high flow regulators feature inlet pressures up to 3000 PSIG *(206.84 bar)*, and Cv 2.0 or 1.0. Premier 2800P Series regulators are used to regulate to a broad range of corrosive and non-corrosive media (based on materials of construction).

FEATURES

- Significantly reduced supply pressure effect / increased stability in outlet pressure
- High flow capacity (Cv): 2.0 or 1.0
- Piston sensed
- Non-venting
- Variety of materials available
- Machined bar stock body eliminates porosity found in castings
- Very competitive pricing

The Premier 2800P Series pressure reducing regulator's design is remarkably flexible.
Contact Premier Industries for a custom 2800P Series regulator to meet your exact needs.

2800P SERIES

HIGH FLOW PISTON SENSED
Pressure Reducing Regulators

SPECIFICATIONS

- **MAXIMUM INLET PRESSURE:** 3000 PSIG *(206.84 bar)*
- **CONTROL PRESSURE RANGES:**
  - 0-120 PSIG *(0 - 8.27 bar)*
  - 0-125 PSIG *(0 - 8.62 bar)*
  - 0-150 PSIG *(0 - 10.34 bar)*
  - 0-250 PSIG *(0 - 17.24 bar)*
  - 0-350 PSIG *(0 - 24.13 bar)*
  - 0-500 PSIG *(0 - 34.47 bar)*
- **FLOW (Cv):** 2.0 *(standard)* 1.0 optional

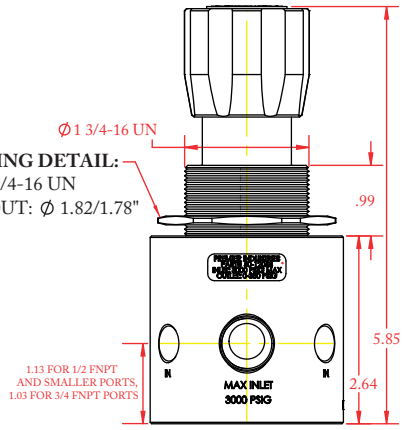

MATERIALS OF CONSTRUCTION

- **BODY:**
  - 6061-T6 Aluminum / Clear Anodized
  - SAE 360 Brass / Nickel Plated
  - 316 Stainless Steel
- **BONNET:**
  - 6061-T6 Aluminum/Nickel Plated *(finish to match wetted material finish)*
  - 303 Stainless Steel
  - 316 Stainless Steel
- **PISTON:**
  - 303 Stainless Steel
  - 316 Stainless Steel
- **MAIN VALVE SEAT:**
  - PEEK®
  - PCTFE
- **ELASTOMER SEALS:**
  - BUNA-N
  - Viton®
  - EPDM
- **MAIN VALVE PARTS:**
  - 303 stainless steel and 316 stainless steel wetted alloys *(used in aluminum and brass body options)*
  - 316 stainless steel bonnet & 316 stainless steel wetted alloys *(used in 316 stainless steel body option)*

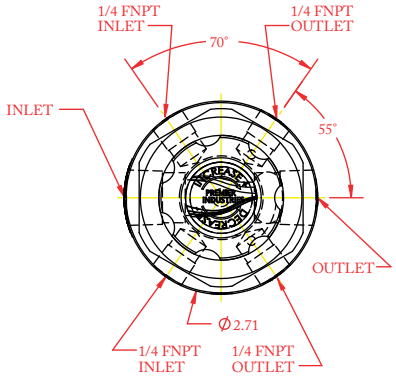

(P/N: 50-12230 shown above)
500 PSIG max outlet

PORTING

- **INLET/OUTLET OPTIONS:**
  - 1/2" FNPT
  - 3/8" FNPT
  - 3/4" FNPT
- **GAUGES:** 1/4-18 FNPT

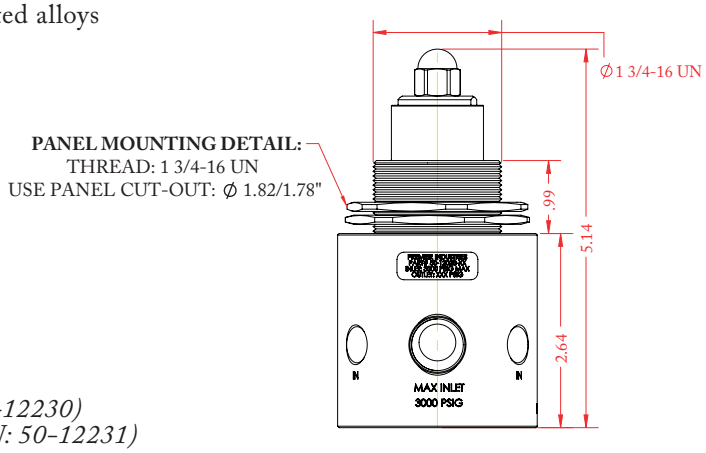

(Part number 50-12231 shown above with tamper resistant acorn nut)
500 PSIG max outlet

OPTIONS

- Gauges
- Adjustable hand knob, 500 PSIG max outlet *(P/N: 50-12230)*
- Tamper resistant acorn nut, 500 PSIG max outlet *(P/N: 50-12231)*
- Relief valve
- Private label
- Panel mounting nuts *(1 or 2) P/N 50-11803*

Vespel ® and Viton® are registered trademarks of E.I.duPont de Nemours and Company
PEEK® is a registered trademark of Victrex PLC

HIGH FLOW PISTON SENSED
Pressure Reducing Regulators

2800P SERIES

STANDARD HAND KNOB

PART #	-	1	2	3	4	5	6	7	8	-	MODS
50-12230	-									-	

1	BODY & BONNET MATERIAL *(Wetted Materials)*
1	6061-T6 Aluminum, Clear Anodize *(303 Stainless Steel & 316 Stainless Steel)*
2	SAE 360 Brass, Nickel Plated *(303 Stainless Steel & 316 Stainless Steel)*
3	316 Stainless Steel, Clean per spec #515 *(316 Stainless Steel & Nitronic 60)*

2	ELASTOMER SEALS
1	Buna-n
2	Viton®
3	EPDM

3	SEAT MATERIAL
1	PCTFE
2	PEEK®

4	OUTLET PRESSURE
1	0-500 PSIG *(0 - 34.47 bar)*
2	0-125 PSIG *(0 - 8.62 bar)*
3	0-120 PSIG *(0 - 8.27 bar)*
4	0-350 PSIG *(0 - 24.13 bar)*
5	0-150 PSIG *(0 - 10.34 bar)*
6	0-250 PSIG *(0 - 17.24 bar)*

5	GAUGES
1	None
2	Include gauges

Gauges not available on C & F porting configurations, outlet gauge only available on G & I porting configurations.

6	PANEL MOUNTING NUT
0	None
1	1 mounting nut
2	2 mounting nuts

7	PORTING CONFIGURATION
A	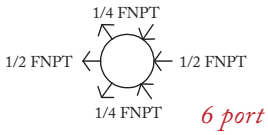 *6 port*
B	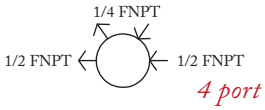 *4 port*
C	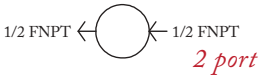 *2 port*
D	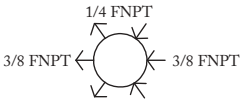 *6 port*
E	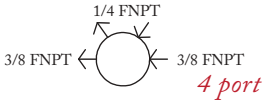 *4 port*
F	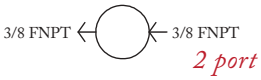 *2 port*
G	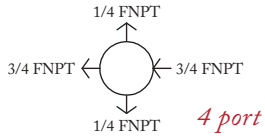 *4 port*
H	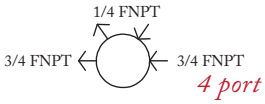 *4 port*
I	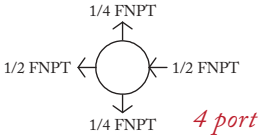 *4 port*
J	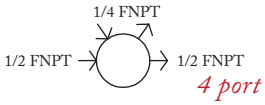 *4 port*

8	MOUNTING HOLES
0	None

Contact Premier for mounting options

MODS	
L	Cv 1.0 *(Cv 2.0 standard)*

PEEK® is a registered trademark of Victrex PLC
Viton® is a registered trademark of E.I.duPont de Nemours & Company
** All ports are 1/4" FNPT unless otherwise indicated on the porting configuratons.*
Contact factory for material certifications. Fees may apply.

HIGH FLOW PISTON SENSED
Pressure Reducing Regulators

2800P SERIES

PRESET OUTLET / ACORN NUT

PART #	-	1	2	3	4	5	6	7	8	-	MODS
50-12231	-									-	

1	BODY & BONNET MATERIAL *(Wetted Materials)*
1	6061-T6 Aluminum, Clear Anodize *(303 Stainless Steel & 316 Stainless Steel)*
2	SAE 360 Brass, Nickel Plated *(303 Stainless Steel & 316 Stainless Steel)*
3	316 Stainless Steel, Clean per spec #515 *(316 Stainless Steel & Nitronic 60)*

2	ELASTOMER SEALS
1	Buna-n
2	Viton®
3	EPDM

3	SEAT MATERIAL
1	PCTFE
2	PEEK®

4	OUTLET PRESSURE
1	0-500 PSIG *(0 - 34.47 bar)*
2	0-125 PSIG *(0 - 8.62 bar)*
3	0-120 PSIG *(0 - 8.27 bar)*
4	0-350 PSIG *(0 - 24.13 bar)*
5	0-150 PSIG *(0 - 10.34 bar)*
6	0-250 PSIG *(0 - 17.24 bar)*

5	GAUGES
1	None
2	Include gauges

6	PANEL MOUNTING NUT
0	None
1	1 mounting nut
2	2 mounting nuts

7	PORTING CONFIGURATION
A	1/4 FNPT, 1/2 FNPT, 1/2 FNPT, 1/4 FNPT — *6 port*
B	1/4 FNPT, 1/2 FNPT, 1/2 FNPT — *4 port*
C	1/2 FNPT, 1/2 FNPT — *2 port*
D	1/4 FNPT, 3/8 FNPT, 3/8 FNPT, 1/4 FNPT — *6 port*
E	1/4 FNPT, 3/8 FNPT, 3/8 FNPT — *4 port*
F	3/8 FNPT, 3/8 FNPT — *2 port*
G	1/4 FNPT, 3/4 FNPT, 3/4 FNPT, 1/4 FNPT — *4 port*
H	1/4 FNPT, 3/4 FNPT, 3/4 FNPT — *4 port*
I	1/4 FNPT, 1/2 FNPT, 1/2 FNPT, 1/4 FNPT — *4 port*

8	MOUNTING HOLES
0	None

Contact Premier for mounting options

MODS	
XXX	Preset outlet pressure (XXX) *E.G. 075 = 75 PSIG* ***The end user is responsible to specify a preset outlet pressure. If an outlet pressure is not specified, the pressure will be left unset. Never exceed the maximum outlet pressure specified on the part number.*
L	Cv 1.0 *(Cv 2.0 standard)*

Separate multiple modifications with a dash
e.g.
125 psig preset outlet pressure w/ Cv 1.0 = 125-L

PEEK® is a registered trademark of Victrex PLC

Viton® is a registered trademark of E.I.duPont de Nemours & Company

Contact factory for material certifications. Fees may apply.

DOME LOADED HIGH FLOW, PISTON SENSED

Pressure Reducing Regulators

2800PDL SERIES

PREMIER INDUSTRIES

1590 99th Ln NE,
Minneapolis, MN 55449
763-786-4020

MADE IN THE USA

Minneapolis, MN

DESCRIPTION

Premier 2800PDL Series regulators are single stage, high flow, piston sensed regulators with a balanced stem for increased delivery pressure stability. These piston sensed, high flow regulators feature inlet pressures up to 3000 PSIG *(206.84 bar)*, and Cv 2.0. Premier 2800PDL Series regulators feature a 1:1 dome load and max control pressure of 1000 PSIG *(68.95 bar)*. They are used to regulate to a broad range of corrosive and non-corrosive media *(based on materials of construction)*.

FEATURES

- Significantly reduced supply pressure effect / increased stability in outlet pressure
- High flow capacity (Cv): 2.0
- Piston sensed
- 1:1 dome load (1000 PSIG */ 68.95 bar* MAX)
- 3000 PSIG max inlet
- Variety of materials available
- Non-venting
- Machined bar stock body eliminates porosity found in castings
- Very competitive pricing

The Premier 2800PDL Series pressure reducing regulator's design is remarkably flexible.
Contact Premier Industries for a custom 2800PDL Series regulator to meet your exact needs.

2800PDL SERIES

DOME LOADED HIGH FLOW, PISTON SENSED

Pressure Reducing Regulators

SPECIFICATIONS

- **MAXIMUM INLET PRESSURE:** 3000 PSIG *(206.84 bar)*
- **MAXIMUM CONTROL PRESSURE:** 1000 PSIG *(68.95 bar)*
- **DOME LOAD:** 1:1, 1000 PSIG *(68.95 bar)* max
- **FLOW (Cv):** 2.0

OPTIONS

- Panel Mounting Nut(s) *(1 or 2) P/N 50-11803*
- Gauges & mounting holes *(contact Premier)*
- Private Label

MATERIALS OF CONSTRUCTION

- **BODY:**
  - 6061-T6 Aluminum / Clear Anodized
  - 316 Stainless Steel
  - SAE 360 Brass / Nickel Plated
- **BONNET:**
  - 6061-T6 Aluminum / Clear Anodized
  - 316 Stainless Steel
  - SAE 360 Brass / Nickel Plated
- **PISTON:**
  - 303 Stainless Steel
  - 316 Stainless Steel
- **MAIN VALVE SEAT:**
  - PCTFE
  - PEEK®
- **ELASTOMER SEALS:**
  - Nitrile
  - Viton®
  - EPDM
- **MAIN VALVE PARTS:**
  - 300 series stainless steel
    (used in aluminum and brass body options)
  - 316 stainless steel & nitronic 60
    (used in 316 stainless steel body option)
- **OPTIONAL PANEL MOUNTING NUT** *(non-wetted)*:
  - 6061-T6 Aluminum/Nickel Plated

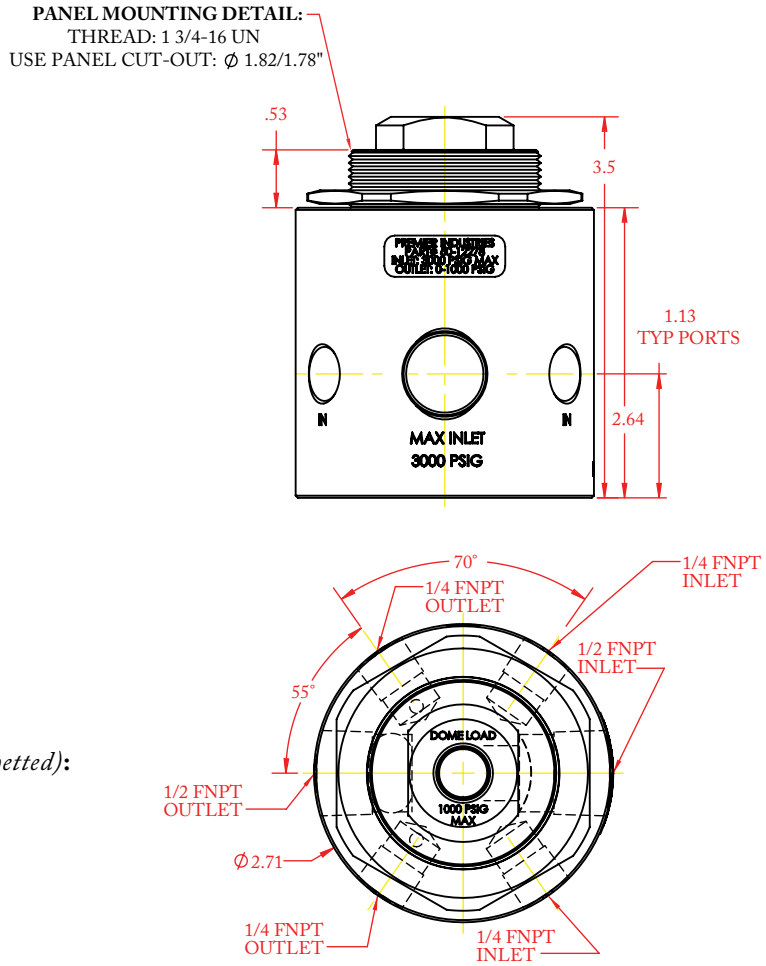

(Part number 50-12278-3XX11A0 shown above)

PORTING

- **INLET OPtIONS:**
  - 1/2" FNPT
  - 3/8" FNPT
- **OUTLET:**
  - 1/2" FNPT
  - 3/8" FNPT
- **GAUGES:**
  - 1/4-18 FNPT

Viton® is a registered trademark of E.I.duPont de Nemours and Company
PEEK® is a registered trademark of Victrex PLC

DOME LOADED HIGH FLOW, PISTON SENSED

Pressure Reducing Regulators

2800PDL SERIES

PART #	-	1	2	3	4	5	6	7
50-12278	-							

1	BODY & BONNET MATERIAL & *FINISH*
1	6061-T6 Aluminum *Clear Anodize*
2	316 Stainless Steel *Clean per spec #515*
3	SAE 360 Brass *Nickel Plated*
2	**ELASTOMER SEALS**
1	Nitrile
2	Viton®
3	EPDM
3	**SEAT MATERIAL**
1	PCTFE
4	**GAUGES**
0	None

5	OPTIONAL PANEL MOUNTING NUT(S)
0	None
1	1 mounting nut
2	2 mounting nuts
6	**PORTING CONFIGURATION**
A	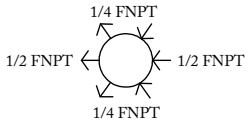 *6 port*
B	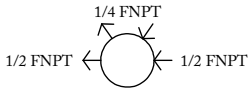 *4 port*
C	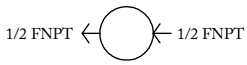 *2 port*
D	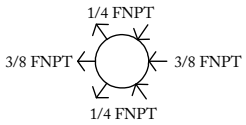 *6 port*
E	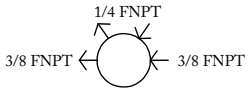 *4 port*
F	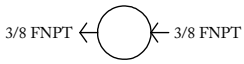 *2 port*

7	MOUNTING HOLES
0	None

Viton® is a registered trademark of E.I.duPont de Nemours & Company
PEEK® is a registered trademark of Victrex PLC
Contact factory for material certifications. Fees may apply.

HIGH FLOW PISTON SENSED CAPTURED VENTING

Pressure Reducing Regulators

2860PDL SERIES

PREMIER INDUSTRIES

1590 99th Ln NE,
Minneapolis, MN 55449
763-786-4020

MADE IN THE USA

Minneapolis, MN

DESCRIPTION

Premier 2860PDL Series regulators are captured venting, single stage regulators with a balanced stem for increased stability in delivery pressure / significantly reduced supply pressure effect. These piston sensed, high flow regulators are rated for inlet pressures up to 3000 PSIG *(206.84 bar)*, and Cv 2.0. Premier 2860PDL Series regulators are used to regulate to a broad range of corrosive and non-corrosive media (based on materials of construction).

FEATURES

- Captured venting
- Significantly reduced supply pressure effect / increased stability in outlet pressure
- High flow capacity (Cv): 2.0
- Piston sensed
- Variety of materials available
- Machined bar stock body eliminates porosity found in castings
- Very competitive pricing

The Premier 2860PDL Series pressure reducing regulator's design is remarkably flexible.
Contact Premier Industries for a custom 2860PDL Series regulator to meet your exact needs.

2860PDL SERIES

HIGH FLOW PISTON SENSED CAPTURED-VENTING

Pressure Reducing Regulators

SPECIFICATIONS

- **MAXIMUM INLET PRESSURE:** 3000 PSIG *(206.8 bar)*
- **MAXIMUM OUTLET PRESSURE:** 1500 PSIG *(103.4 bar)*
- **MAXIMUM DOME LOAD:** 1550 PSIG *(106.9 bar)***

***An additional 10-40 psig dome load is required to maintain 1:1 outlet:dome ratio*

- **FLOW (Cv):** 2.0

MATERIALS OF CONSTRUCTION

- **BODY/BONNET/SENSOR OPTIONS:**
  - 6061-T6 Aluminum / Clear Anodized
  - 303 Stainless Steel
  - 316 Stainless Steel
  - SAE 360 Brass / Nickel Plated
- **MAIN VALVE SEAT:**
  - PCTFE
- **ELASTOMER SEALS:**
  - BUNA-N
  - Viton®
  - EPDM
  - Neoprene
  - Low temperature nitrile
- **MAIN VALVE PARTS:**
  - 300 Series Stainless Steel
    (used in aluminum, brass, and 303 stainless steel body options)
  - 316 Stainless Steel and Nitronic 60 wetted alloys
    (used in 316 stainless steel body option)

PORTING

- **PROCESS/VENT PORTS:**
  - 1/2" FNPT
  - 1/4" SAE J1926
  - 1/2" SAE J1926
- **DOME:**
  - 1/4" FNPT
  - 1/4" SAE J1926
- **GAUGE PORTS:**
  - 1/4" FNPT

OPTIONS

- Gauges
- Private Label
- Panel Mounting Nut

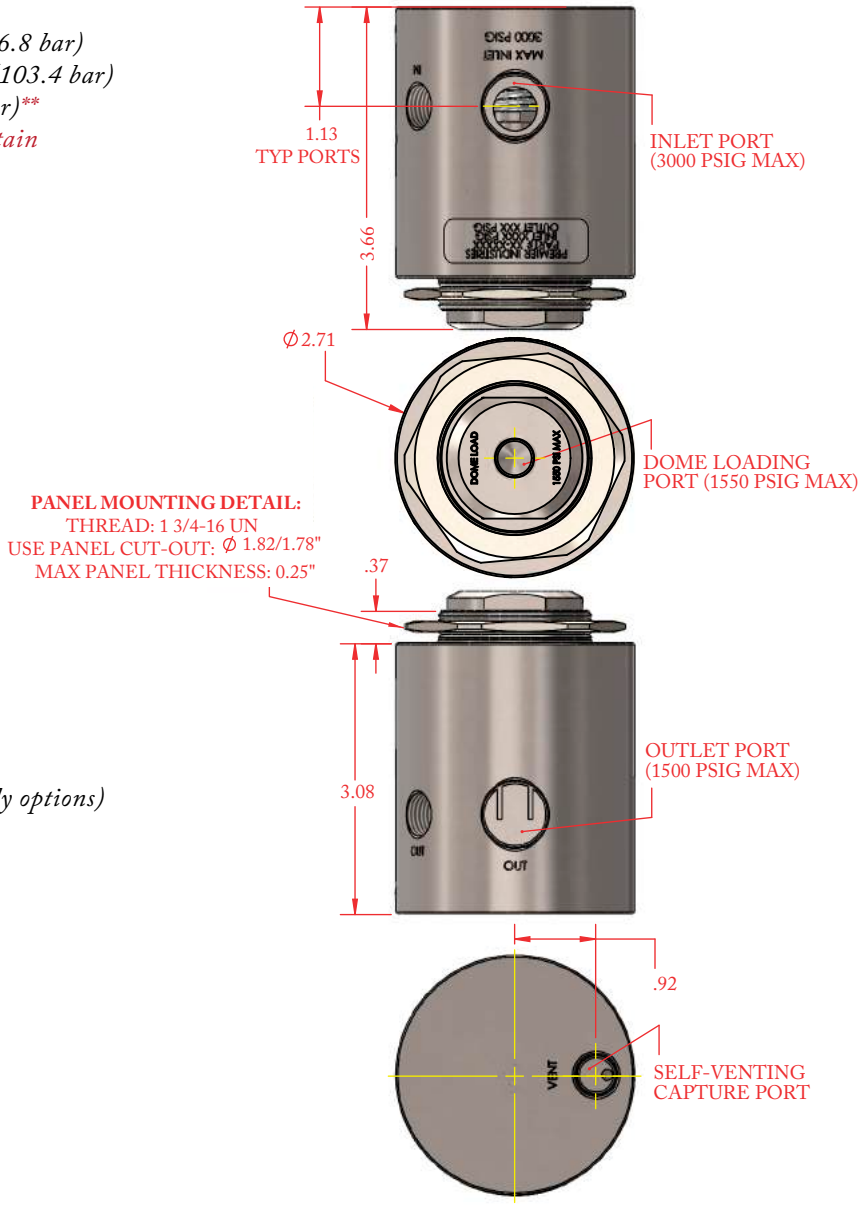

(P/N: 50-12732 shown above)

Viton® is a registered trademark of E.I.duPont de Nemours and Company

HIGH FLOW PISTON SENSED CAPTURED VENTING

Pressure Reducing Regulators

2860PDL SERIES

PART #	-	1	2	3	4	-	MODS
50-12732	-					-	

1	BODY/ BONNET/SENSOR MATERIAL
1	6061-T6 Aluminum *Clear Anodized*
2	303 Stainless Steel
3	316 Stainless Steel *Clean per spec #515*
4	SAE 360 Brass *Nickel Plated*
2	**ELASTOMER SEALS**
C	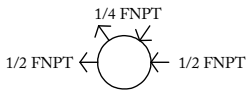
S	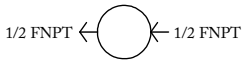
S*	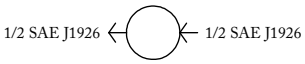
3	**SEAT MATERIAL**
1	PCTFE

4	O-RING MATERIAL
0	Buna-N
2	Viton®
5	EPDM
6	Neoprene
L	Low-temp nitrile

MODIFICATIONS	
Blank	None
PN	include panel mounting nut

Main valve components are 300 Series Stainless Steel for aluminum, brass, and 303 stainless steel body options and 316 Stainless Steel and Nitronic 60 wetted alloys for the 316 stainless steel body option

PEEK 1000® is a registered trademark of Victrex PLC
Viton® is a registered trademark of E.I.duPont de Nemours & Company

ADJUSTABLE FLOW PISTON SENSED

Pressure Reducing Regulators

2900 SERIES

PREMIER INDUSTRIES

1590 99th Ln NE,
Minneapolis, MN 55449
763-786-4020

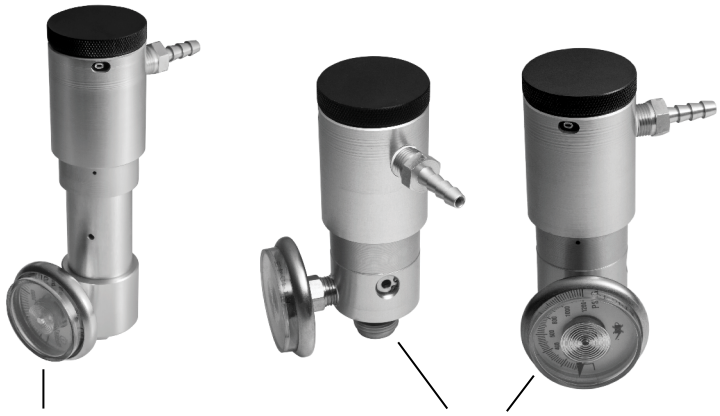

Two stage design
Part # shown above: 50-11573

Single stage design
Part # shown above: 50-11387-01

MADE IN THE USA
Minneapolis, MN

DESCRIPTION

The Premier 2900 Series adjustable flow, piston sensed, variable flow regulators are commonly used with calibration gases and industrial hygiene monitors. Premier 2900 Series regulators have an integral orifice plate capable of providing up to 11 different flow settings with the simple rotation of a hand knob. Indicated flows are approximate and will vary with changes in inlet pressure and normal variations in internal components. The optional two-stage design provides increased flow stability by reducing the impact of variations in cylinder pressure. Regulators should not be used for precise flow calibration purposes. Models are available for both corrosive and non-corrosive service.

FEATURES

- Compact size
- Piston sensed
- Click stop, 12 position, variable flow settings from 0 to 8.0 liters/min
- Machined bar stock body, bonnet and piston eliminates porosity found in castings
- Integral pressure relief valve
- Economically priced
- Optional two stage design is available for increased pressure and flow stability throughout the range of inlet pressure variations.

The Premier 2900 Series pressure reducing regulator's design is remarkably flexible. Contact Premier Industries for a custom 2900 Series regulator to meet your exact needs.

2900 SERIES

ADJUSTABLE FLOW PISTON SENSED
Pressure Reducing Regulators

SPECIFICATIONS

- **MAXIMUM INLET PRESSURE:** 3500 PSIG *(241.32 bar)* (with appropriate inlet connection)
- **STANDARD PRESET CONTROL PRESSURE:**
  - 15 PSIG *(1.03 bar)* outlet pressure
- **FLOW (Cv):**
  - 0.3, 0.5, 1.0, 1.5, 2.0, 2.5, 3.0, 5.0, 6.0, 7.0, 8.0 SLPM

OPTIONS

- Gauges
- Anodized Colors for Aluminum Bodies and Bonnets
- Private Label
- Two stage designs
- 1/4" inlet *(P/N: 50-10385, 50-11321)*
- 1/8" inlet *(P/N: 50-11840)*

MATERIALS OF CONSTRUCTION

- **BODY:**
  - 6061-T6 Aluminum, Clear Anodized
- **PISTON:**
  - SAE 360 Brass
  - 303 Stainless Steel
- **PISTON SEALS:**
  - Viton®
  - Numerous other compounds available
- **VALVE SEAT:**
  - PTFE
- **ORIFICE PLATE:**
  - Standard: Ceramic

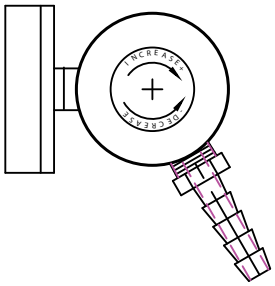

PORTING

- **STANDARD INLET:**
  - C-10 (5/8"-18 UNF)
- **OPTIONAL INLETS:**
  - 1/8" or 1/4" FNPT or MNPT
  - All CGA Connections Available:
    - CGA 165, 180, 320, 510, 580, 600, etc.
- **STANDARD OUTLET:**
  - 1/8" FNPT
- **OPTIONAL OUTLETS:**
  - 1/8", 3/16", or 1/4" Hose Barb
  - 1/8" MNPT

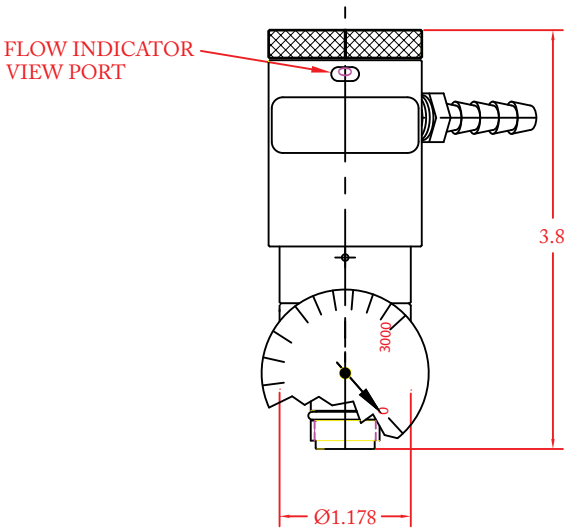

(Part number : 50-11387-01 shown above)

Teflon® and Viton® are registered trademarks of E.I.duPont de Nemours and Company
Contact factory for material certifications. Fees may apply.

HIGH PRESSURE PISTON SENSED

Pressure Reducing Regulators

3000 SERIES

PREMIER INDUSTRIES

1590 99th Ln NE,
Minneapolis, MN 55449
763-786-4020

MADE IN THE USA

Minneapolis, MN

DESCRIPTION

The high pressure Premier 3000 Series pressure reducing regulators are single stage, piston sensed, variable delivery, pressure reducing regulators, rated for inlet and outlet pressures up to 10000 PSIG *(689.5 bar)* and Cv 0.06, 0.12, or 0.2.

Premier 3000 Series regulators are used to regulate a broad range of non-corrosive and corrosive media (based on materials of construction). They are designed for increased serviceability and reliable operation with the integral 15 micron stainless steel valve cartridge filter. Premier 3000 Series regulators can be supplied with a wide range of inlet and outlet configurations for smooth integration into your desired application.

FEATURES

- Self-venting with adjustable bonnet vent valve
- Non-venting optional
- 15 micron sintered 316 stainless steel inlet filter
- Cv 0.06, 0.12, or 0.2
- Optional tamper resistant acorn nut
- Multiple mounting options *(bracket/panel nuts/surface mount)*
- Machined bar stock body, bonnet and piston eliminates porosity found in castings

APPLICATIONS

- Research labs
- Manufacturing process
- Petrochemical plants
- Aircraft support systems

The Premier 3000 Series pressure reducing regulator's design is remarkably flexible. Contact Premier Industries for a custom 3000 Series regulator to meet your exact needs.

3000 SERIES

HIGH PRESSURE PISTON SENSED
Pressure Reducing Regulators

SPECIFICATIONS

- **MAXIMUM INLET PRESSURE (brass):** 6000 PSIG *(413.7 bar)*
- **MAXIMUM INLET PRESSURE (SS):** 10000 PSIG *(689.5 bar)*
- **CONTROL PRESSURE RANGES:**
  - 5-300 PSIG *(0.35-20.7 Bar)*,
  - 5-400 PSIG *(0.35-27.6 Bar)*,
  - 5-500 PSIG *(0.35-34.5 Bar)*,
  - 5-800 PSIG *(0.35-55.2 Bar)*,
  - 5-1000 PSIG *(0.35-68.9 Bar)*,
  - 10-1500 PSIG *(0.69-103.4 Bar)*,
  - 15-2500 PSIG *(1.0-172.4 Bar)*,
  - 25-4000 PSIG *(1.7-275.8 Bar)*,
  - 50-6000 PSIG *(3.4-413.7 Bar)*,
  - 100-10000 PSIG *(6.9-689.5 Bar)*
- **FLOW (Cv):** 0.06, 0.12, or 0.2

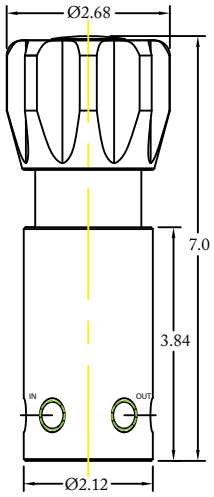

(Part number 30-10000 shown above)

MATERIALS OF CONSTRUCTION

- **BODY OPTIONS** :
  - SAE 360 brass,
  - 316 Stainless Steel,
- **BONNET OPTIONS**:
  - SAE 360 brass,
  - 17-4 Stainless Steel
  - 316 Stainless Steel
- **WETTED, OTHER**: 316 Stainless Steel, 17-4 Stainless Steel
- **SEAL OPTIONS**: Viton-A®, Buna-N, EPDM, Kalrez®

  (Contact factory for Kalrez® pricing) other compounds available upon request
- **BACK-UP RINGS**: PTFE & PCTFE
- **VALVE SEAT OPTIONS**:
  - Vespel® *(10000 psig max inlet)*
  - PEEK® *(6000 psig max inlet)*
  - PCTFE *(3000 psig max inlet)*

(Standard 30-10212 SEAT: Vespel®)

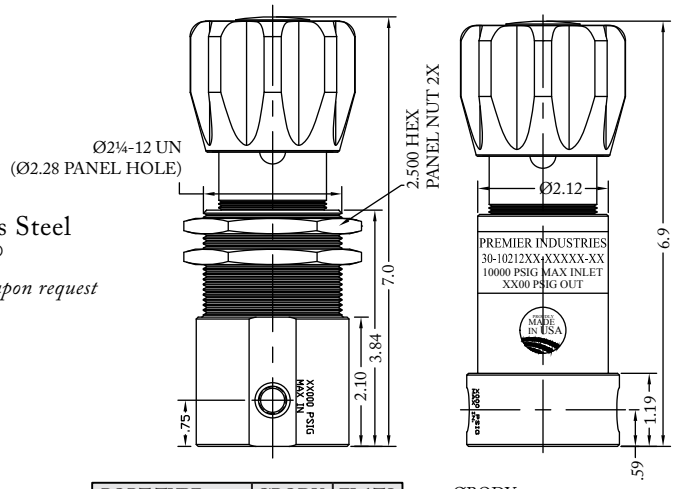

PORT TYPE	ØBODY	FLATS
NPT	Ø2.48	——
1/4" M.P. & H.P	Ø2.48	2.36
1/4" SAE J1926	Ø2.73	2.52
1/4" SAE AS5202	Ø2.98	2.81
3/8" SAE	Ø2.98	2.81
3/8" M.P. & H.P.	Ø2.98	2.81
1/2" SAE	Ø3.23	2.98
9/16" M.P. & H.P.	Ø3.23	2.98

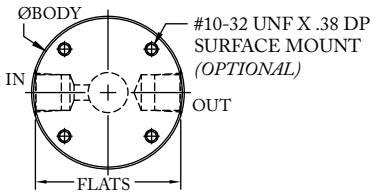

(Part number 30-10212 shown above)

PORTING

- **INLET PORTING**:
  - 1/4" FNPT *(standard)*
- **OUTLET PORTING**:
  - 1/4" FNPT *(standard)*

See the table on page 4 for other porting options (P/N 30-10212)

OPTIONS

- Gauges
- Private label
- Panel mounting bracket: *P/N: 30-10059 (Ø2.15 panel hole)*
- Panel mounting nuts: *P/N: 30-10189 (Ø2.28 panel hole)*
- Tamper resistant acorn nut *(P/N: 30-10000, or 30-10212)*
- Captured vent port model *(P/N: 30-10206)*

OPTIONAL PANEL MOUNTING BRACKET
(for Ø2.12 body or mounting bracket style regulator body)

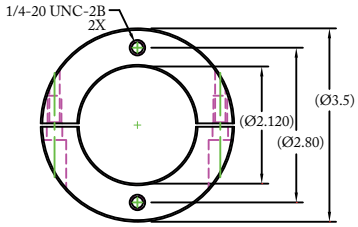

(Part number 30-10059 shown above)

Vespel® Kalrez® & Viton-A® are registered trademarks of E.I.duPont de Nemours and Company
PEEK® is a registered trademark of Victrex PLC

HIGH PRESSURE PISTON SENSED

Pressure Reducing Regulators

3000 SERIES

PART #	-	1	2	3	4	-	5 6	-	7	MODS
30-10000	-					-		-		

1	BODY/BONNET MATERIALS *(MAX. INLET PRESSURE)*
1	SAE 360 Brass Body & Bonnet *(6000 PSIG / 413.7 Bar)*
2	316SS Body, 17-4SS Bonnet *(10000 PSIG / 689.5 Bar)*
3	316SS Body & Bonnet *(10000 PSIG / 689.5 Bar)*
4	SAE 360 Brass Body & Bonnet *(3000 PSIG / 206.8 Bar)* **Rated for select CGA fittings*
5	316SS Body, 17-4SS Bonnet *(3000 PSIG / 206.8 Bar)* **Rated for select CGA fittings*

2	PORTING CONFIGURATION *(1/4 FNPT)*
C	
S	
E	
D	
A	

3	OUTLET PRESSURE
B	0-300 PSIG *(0-20.7 Bar)*
A	0-400 PSIG *(0-27.6 Bar)*
1	0-500 PSIG *(0-34.5 Bar)*
0	0-800 PSIG *(0-55.2 Bar)*
2	0-1000 PSIG *(0-68.9 Bar)*
3	10-1500 PSIG *(0.69-103.4 Bar)*
4	15-2500 PSIG *(1.0-172.4 Bar)*
5	25-4000 PSIG *(1.7-275.8 Bar)*
6	50-6000 PSIG *(3.4-413.7 Bar)*
7	100-10000 PSIG *(6.9-689.5 Bar)* *(stainless steel only)*

4	FLOW (Cv)
0	Cv 0.06
1	Cv 0.12
2	Cv 0.2

5 6	O-RINGS
00	BUNA-N
02	VITON-A®
05	EPDM
11	KALREZ® *(Contact factory for pricing)*
12	NITRILE, LO-TEMP
(Consult factory for other options)	

7	VALVE SEAT
0	VESPEL® *(10000 psig max inlet)*
1	PEEK® *(6000 psig max inlet)*
2	PCTFE *(3000 psig max inlet)* *(Contact factory for pricing)*

MODIFICATIONS *Separate multiple mods with a dash.*	
Blank	None
G1	Gauges
NV	Non-venting
ANT	Acorn nut
NV-N	Non-venting, NACE MR0175 compliant

10000 PSIG MAX INLET (STAINLESS STEEL)
6000 PSIG MAX INLET (BRASS)
The end user is responsible to ensure adequate fittings are used to connect regulator to plumbing.

Vespel® Kalrez® & Viton® are registered trademarks of E.I.duPont de Nemours and Company
PEEK® is a registered trademark of Victrex PLC

Contact factory for material certifications. Fees may apply.

HIGH PRESSURE PISTON SENSED

Pressure Reducing Regulators

3000 SERIES

PART #	1 2	-	3	4	5	6	7	-	8 9	-	MODS
30-10212		-						-		-	

Standard: 316 Stainless Steel body & 17-4 Stainless Steel bonnet with a Vespel® valve seat

1 2	MOUNTING STYLE
MB	Mounting bracket style body
PN	Panel nut style body *(panel nuts included)*

3	OUTLET PRESSURE
B	0-300 PSIG *(0-20.7 Bar)*
A	0-400 PSIG *(0-27.6 Bar)*
1	5-500 PSIG (0.34-34.5 Bar)
2	5-800 PSIG (0.34-55.2 Bar)
3	10-1500 PSIG (0.69-103.4 Bar)
4	15-2500 PSIG (1.0-172.4 Bar)
5	25-4000 PSIG (1.7-275.8 Bar)
6	50-6000 PSIG (3.4-413.7 Bar)
7	100-10000 PSIG (6.9-689.5 Bar) *(stainless steel only)*

4	FLOW (Cv)
0	Cv 0.06
1	Cv 0.12
2	Cv 0.2

5	PORTING CONFIGURATION
A	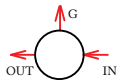
L	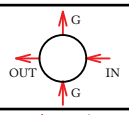
C	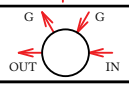
S	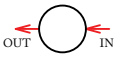
E	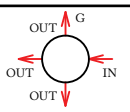

6	PORT SIZE
4	1/4"
6	3/8"
8	1/2"*
9	9/16"**

**1/2" ports not available in medium & high pressure*
***9/16" ports only available in medium & high pressure*

7	PORT TYPE *(IN/OUT)*
1	FNPT
2	SAE J1926
3	SAE AS5202
4	MEDIUM PRESSURE
5	HIGH PRESSURE
7	MS33649

Gauge ports: 1/4" FNPT

8 9	O-RINGS
00	BUNA-N
01	AFLAS®
02	VITON-A®
05	EPDM
11	KALREZ® *(Contact factory for pricing)*
12	NITRILE, LO-TEMP

MODIFICATIONS *Separate multiple mods with a dash.*	
BLANK	None
NV	Non-venting
B	SAE 360 Brass, body & bonnet *6000 psig max*
NV-N	Non-venting, NACE MR0175 compliant
ANT	Acorn nut
PTU	Port type uniform
SM	Surface mount *Pattern dependent on port type, size, & config.* ***- not available on panel mount style bodies***
PK	PEEK® valve seat *(60000 psig max inlet)*

10000 PSIG MAX INLET (SS)
6000 PSIG MAX INLET (brass)
The end user is responsible to ensure adequate fittings are used to connect regulator to plumbing.

Viton-A®, Vespel®, & Kalrez® are registered trademarks of E.I.duPont de Nemours and Company
AFLAS® is a registered trademark of the Asahi Glass Co., Ltd
PEEK® is a registered trademark of Victrex PLC

Contact factory for material certifications. Fees may apply.

AIR LOADED HIGH PRESSURE
Pressure Reducing Regulators

3000AL SERIES

PREMIER INDUSTRIES

1590 99th Ln NE,
Minneapolis, MN 55449
763-786-4020

MADE IN THE USA
Minneapolis, MN

DESCRIPTION

The Premier 3000AL Series air loaded, piston sensed, single stage, high pressure, pressure reducing regulators features inlet and outlet pressures up to 10000 PSIG *(689.48 bar)*, and Cv 0.06, 0.12, or 0.2. Premier 3000AL Series regulators are designed for increased serviceability and reliable operation with the integral 15 micron stainless steel valve cartridge filter. They are used to regulate to a broad range of non-corrosive and corrosive media (based on materials of construction).

FEATURES

- 15 micron sintered 316 stainless steel inlet filter
- Compatible with electro pneumatic controllers
- Captured venting
- Very competitive pricing
- Machined bar stock body, bonnet and piston eliminates porosity found in castings
- Numerous optional features are available.
- Hydraulic versions available

The Premier 3000AL Series pressure reducing regulator's design is remarkably flexible.
Contact Premier Industries for a custom Premier 3000AL Series regulator to meet your exact needs.

3000AL SERIES

AIR LOADED HIGH PRESSURE
Pressure Reducing Regulators

SPECIFICATIONS

- **MAXIMUM INLET PRESSURE:**
  - REGULATOR: 10000 PSIG / 689.5 bar *(stainless steel)*
    6000 PSIG / 413.69 bar *(brass)*
  - AIR ACTUATOR: 100 PSIG *(6.89 bar)*
- **CONTROL PRESSURE RANGES:**
  - 10-1500 PSIG *(0.69 - 103.42 bar)*
    Diameter: 1.000"
    Area: 0.7854 in²
    *Ratio: 16/1 ***
  - 15-2500 PSIG *(1.03 - 172.37 bar)*
    Diameter: 0.750"
    Area: 0.4418 in²
    *Ratio: 28/1 ***
  - 25-3000 psig *(1.7 - 206.8 bar)*
    Diameter: 0.684"
    Area: 0.3675 in²
    *Ratio: 34/1 ***
  - 50-6000 PSIG *(3.45 - 413.69 bar)*
    Diameter: 0.500"
    Area: 0.1964 in²
    *Ratio: 64/1 ***
  - 100-10000 PSIG *(6.89 - 689.5 bar)*
    Diameter: 0.375"
    Area: 0.1104 in²
    *Ratio: 114/1 ***

*** 4.0" diameter diaphragm*
Diaphragm area: 12.5664 in²

- **FLOW (Cv):** 0.06, 0.12, or 0.20
- **AMBIENT OPERATING TEMPERATURES:***
  - -4°F/-20°C to 212°F/100°C (Viton®)
  - -15°F/-26°C to 212°F/100°C (BUNA-N)

**Lower temperature compounds are available, Above temperature ranges will apply to the majority of media for which the material is recommended. Temperature ranges can vary with some media, ALWAYS TEST UNDER SERVICE CONDITIONS.*

PORTING

- **INLET/OUTLET PORT OPTIONS**
  - 1/4", 3/8", 1/2" FNPT
  - 1/4", 3/8", 1/2" SAE J1926
  - 1/4", 3/8", 1/2" SAE AS5202
  - 1/4", 3/8", 9/16" Medium Pressure
  - 1/4", 3/8", High Pressure
  - 1/4", 3/8", 1/2" NPTF
- **AIR ACTUATOR PORT OPTIONS**:
  - 1/4" NPTF
  - 1/8" FNPT
  - 1/4" SAE AS5202
  - 1/4" SAE J1926
- **VENT**: 1/4" (inlet/outlet port type)

OPTIONAL ITEMS

- Non-venting design
- Panel mounting bracket: *P/N: 30-10059 (Ø2.15 panel hole)*
- NACE MR0175 compatible design
- Private label

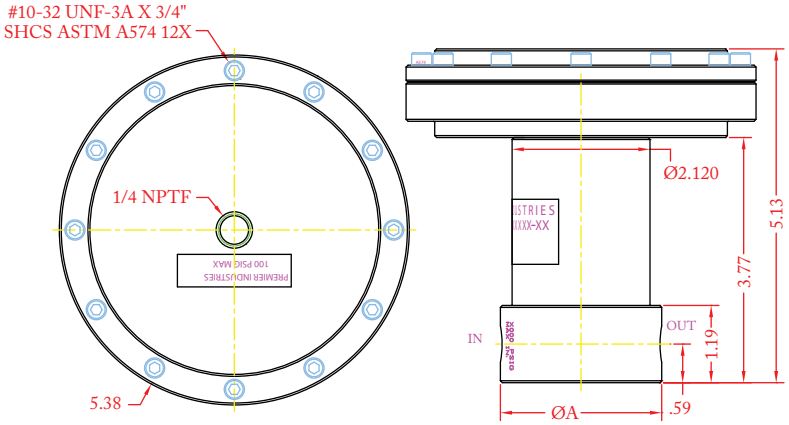

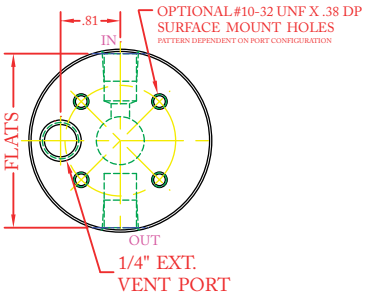

PORT TYPE	ØA	FLATS
NPT, NPTF	Ø2.48	——
1/4" J1926 & M.P.	Ø2.48	2.36
1/4" AS5202	Ø2.98	2.81
3/8" SAE & M.P.	Ø2.98	2.81
1/2" SAE	Ø3.23	2.98
9/16" M.P.	Ø3.23	2.98

(Part number: 30-10219G shown above)

MATERIALS OF CONSTRUCTION

- **BODY**: SAE 360 brass or 316 Stainless Steel
- **BONNET:** *(non-wetted)* 303 Stainless Steel
- **HOUSING, AIR ACTUATOR :** 6061-T6 Aluminum/clear anodized
- **DIAPHRAGM, AIR ACTUATOR :** Neoprene, nylon fabric-reinforced
- **MAIN VALVE STEM:** 17-4 Stainless Steel (hardened)
- **MAIN VALVE SEAT:** Vespel®
- **VENT VALVE SEAT:** Vespel®
- **ELASTOMER SEALS:**
  - BUNA-N
  - AFLAS®
  - Viton-A®
  - EPDM
  - Kalrez® *(Contact factory for pricing)*
- **OTHER WETTED PARTS:**
  - 316 Stainless Steel
  - 17-4 Stainless Steel

Kalrez® Vespel® & Viton-A® are registered trademarks of E.I.duPont de Nemours and Company
AFLAS® is a registered trademark of the Asahi Glass Co., Ltd.

AIR LOADED HIGH PRESSURE
Pressure Reducing Regulators

3000AL SERIES

SERIES	1	-	2	3	4	5	6	-	7 8	MODS
30-10219G		-						-		

1	BODY MATERIALS *(MAX. INLET PRESSURE)*
B	SAE 360 Brass *(6000 psig / 413.7 bar)*
Blank	316 Stainless Steel *(10000 psig / 689.5 bar)*

2	OUTLET PRESSURE	
3	10-1500 psig *(0.69-103.4 bar)*	*Diameter: 1.000"* *Area: 0.7854 in²* *Ratio: 16/1 **
4	15-2500 psig *(1.0-172.4 bar)*	*Diameter: 0.750"* *Area: 0.4418 in²* *Ratio: 28/1 **
6	50-6000 psig *(3.4-413.7 bar)*	*Diameter: 0.500"* *Area: 0.1964 in²* *Ratio: 64/1 **
7	100-10000 psig *(6.9-689.5 bar)* *(stainless steel only)*	*Diameter: 0.375"* *Area: 0.1104 in²* *Ratio: 114/1 **
8	25-3000 psig *(1.7-206.8 bar)*	*Diameter: 0.684"* *Area: 0.3675 in²* *Ratio: 34/1 **

** 4.0" diameter diaphragm*
Diaphragm area: 12.5664 in²

3	FLOW (Cv)
0	Cv 0.06
1	Cv 0.12
2	Cv 0.2

Vent Valve: Cv 0.06

4	PORTING CONFIG. *(1/4 FNPT)*
A	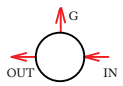
L	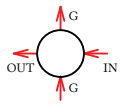
C	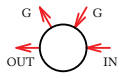
S	

5	PORT SIZE *(inlet/outlet)*
4	1/4"
6	3/8"
8	1/2"**
9	9/16"***

***1/2" ports **not** available in medium pressure or high pressure*
****9/16" ports **only** available in medium pressure*

Gauge Ports: 1/4" FNPT
Vent Port: 1/4" inlet/outlet port type

6	PORT TYPE *(inlet/outlet/vent)*
1	FNPT
2	SAE J1926
3	SAE AS5202
4	Medium pressure
5	High pressure
6	NPTF

7 8	O-RINGS
00	BUNA-N
01	AFLAS®
02	VITON-A®
05	EPDM
11	KALREZ® *(Contact factory for pricing)*

MODIFICATIONS *Separate multiple mods with a dash*	
Blank	None
AS	1/4" SAE AS5202 LOADER PORT
E	1/8" NPT AIR LOADER PORT
J	1/4" SAE J1926 LOADER PORT
N	NACE MR0175 COMPATIBLE
SM	SURFACE MOUNT

Kalrez® & Viton® are registered trademarks of E.I.duPont de Nemours and Company
AFLAS® is a registered trademark of the Asahi Glass Co., Ltd.

10000 PSIG MAX INLET (Stainless Steel) 6000 PSIG MAX INLET (Brass)
The end user is responsible to ensure adequate fittings are used to connect regulator to plumbing.

Contact factory for material certifications. Fees may apply.

DOME LOADED HIGH PRESSURE PNEUMATIC

Pressure Reducing Regulators

3000DL SERIES

PREMIER INDUSTRIES

1590 99th Ln NE,
Minneapolis, MN 55449
763-786-4020

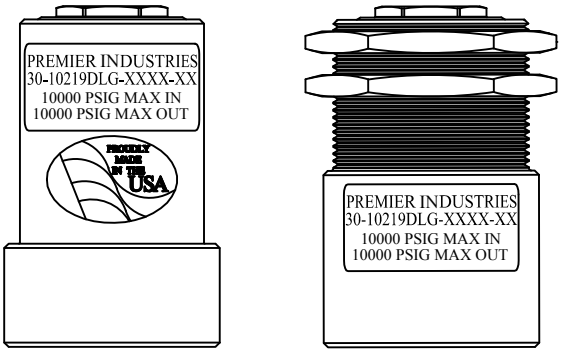

MADE IN THE USA

Minneapolis, MN

DESCRIPTION

Premier 3000DL Series dome loaded, high pressure, pneumatic, pressure reducing regulators: rugged, compact regulators for remotely-controlled high pressure applications. These piston sensed units are rated for inlet and outlet pressures up to 10000 PSIG *(689.5 bar)* and Cv 0.06, 0.12, 0.20, or 0.30.

Premier 3000DL Series regulators are used to regulate a broad range of non-corrosive and corrosive media (based on materials of construction). Captured venting allows fluids/gases to be safely piped away.

FEATURES

- Captured venting
- Dome loaded for remote pressure control
- Compatible with electro-pneumatic controllers
- 17-4 & 316 stainless steel construction for strength and corrosion resistance
- 10000 PSIG *(689.5 bar)* max inlet
- Cv 0.06, 0.12, 0.20, or 0.30
- Economical pricing
- Machined bar stock body, bonnet and piston reduce particle shedding and contamination

The Premier 3000DL Series pressure reducing regulator's design is remarkably flexible.
Contact Premier Industries for a custom 3000DL Series regulator to meet your exact needs.

3000DL SERIES

DOME LOADED HIGH PRESSURE PNEUMATIC

Pressure Reducing Regulators

SPECIFICATIONS

- **MAX INLET PRESSURE:** 10000 PSIG *(689.5 bar)*
- **MAX OUTLET PRESSURE:** 10000 PSIG *(689.5 bar)*
- **MAX DOME LOAD:** 10000 PSIG *(689.5 bar)*
- **DOME TO SENSOR RATIO:** 1:1
- **FLOW (Cv):** 0.06, 0.12, 0.20, 0.30
- **VENT VALVE (Cv):** 0.06
- **OPERATING TEMPERATURE:**
  - -15°F/-26°C to 165°F/74°C (BUNA-N)
  - -4°F/-20°C to 165°F/74°C (VITON®)
  - -65°F/-54°C to 165°F/74°C (EPDM)
  - 15°F/-9°C to 165°F/74°C (AFLAS®)
  - -65°F/-54°C to 165°F/74°C (NITRILE)

MATERIALS OF CONSTRUCTION

- **BODY & BONNET** :
  - 316 Stainless Steel,
- **WETTED PARTS, OTHER**:
  - 316 Stainless Steel,
  - 17-4 Stainless Steel
- **MAIN VALVE SEAT OPTIONS**:
  - 17-4 Stainless Steel
  - Vespel®
- **VENT VALVE SEAT OPTIONS**:
  - 316 Stainless Steel
  - Vespel®
- **MAIN VALVE / VENT VALVE STEM:** 17-4 Stainless Steel
- **O-RING MATERIAL**:
  - BUNA-N
  - AFLAS®
  - Viton®
  - EPDM
  - Kalrez® *(Contact factory for pricing)*
  - Nitrile, Lo-temp
- **BACK-UP RINGS**: PCTFE

PORTING

- **INLET/ OUTLET PORTING OPTIONS**:
  - 1/4", 3/8", 1/2" FNPT
  - 1/4", 1/2", 3/8", SAE J1926
  - 1/4", 1/2", 3/8", SAE AS5202*
  - 1/4", 3/8", 9/16", Medium pressure
  - 1/4", 3/8", 9/16", High pressure
  - 1/4", 3/8", 1/2", NPTF
- **GAUGE PORTS**:
  - 1/4" FNPT
- **DOME PORTS**:
  - 1/4" *(match inlet/outlet/vent type)*
- **VENT PORTS**:
  - 1/4" *(match inlet/outlet/vent type)*

OPTIONS

- Private label
- Panel mounting bracket P/N: 30-10059 *(Ø2.15 panel hole)*
- Panel mounting nuts P/N: 30-10189 *(Ø2.28 panel hole)*

PANEL MOUNTING BRACKET STYLE

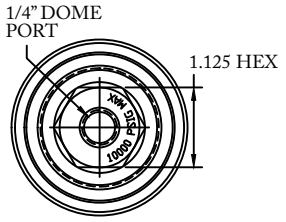

PANEL NUT STYLE

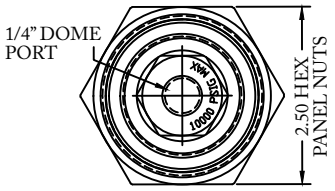

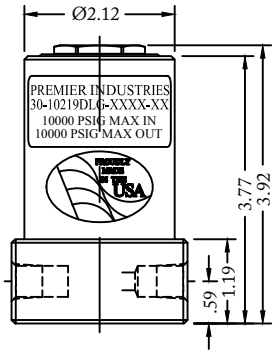

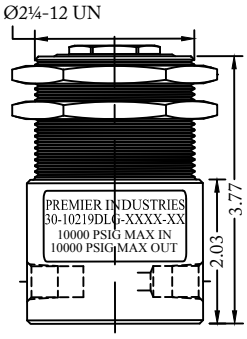

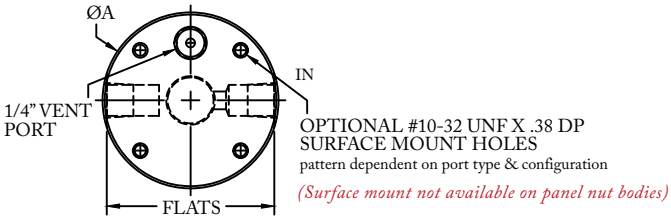

(Part number 30-10219DLG shown above)

PORT TYPE	ØA	FLATS
NPT, NPTF	Ø2.48	——
1/4" J1926, M.P., H.P.	Ø2.48	2.36
1/4" AS5202	Ø2.98	2.81
3/8" SAE, M.P., H.P.	Ø2.98	2.81
1/2" SAE	Ø3.23	2.98
9/16" M.P.	Ø3.23	2.98

**Bodies w/ 'L' porting configurations and 3/8" ports and larger require a larger ØA*

**SAE AS5202 supersedes MS33649*
Vespel® Kalrez® & Viton® are registered trademarks of E.I.duPont de Nemours and Company
AFLAS® is a registered trademark of the Asahi Glass Co., Ltd.

DOME LOADED HIGH PRESSURE PNEUMATIC

Pressure Reducing Regulators

3000DL SERIES

SERIES	-	1	2	3	4	-	5 6	-	MODS
30-10219DLG	-					-		-	

1	MAIN VALVE SEATS & Cv RATING
0	Vespel® Cv 0.06
1	Vespel® Cv 0.12
2	Vespel® Cv 0.20
3	Vespel® Cv 0.30

2	PORTING CONFIG. *(1/4" FNPT)*
A	
L	
C	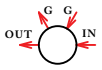
S	

3	PORT SIZE
4	1/4"
6	3/8"
8	1/2"*
9	9/16**

**1/2" not available in medium & high pressure*
***9/16" only available in medium & high pressure*

4	PORT TYPE *(IN/OUT VENT/DOME)*
1	FNPT
2	SAE J1926
3	SAE AS5202*
4	Medium Pressure
5	High Pressure
6	NPTF

5 6	O-RINGS
00	BUNA-N
01	AFLAS®
02	VITON®
05	EPDM
11	KALREZ® *(Contact factory for pricing)*
12	NITRILE, LO-TEMP

MODIFICATIONS *Separate multiple mods with a dash*	
Blank	None
N	NACE MR0175
PN	PANEL NUT STYLE BODY
PTU	PORT TYPE UNIFORM
SM	SURFACE MOUNT *(Not available on panel nut bodies)*

**SAE AS5202 supersedes MS33649*

10000 PSIG MAX INLET
The end user is responsible to ensure adequate fittings are used to connect regulator to plumbing.

Vespel® Kalrez® & Viton® are registered trademarks of E.I.duPont de Nemours and Company
AFLAS® is a registered trademark of the Asahi Glass Co., Ltd

Contact factory for material certifications. Fees may apply.

HIGH PRESSURE HIGH FLOW
Pressure Reducing Regulators

3016 SERIES

PREMIER INDUSTRIES

1590 99th Ln NE,
Minneapolis, MN 55449
763-786-4020

MADE IN THE USA
Minneapolis, MN

DESCRIPTION

Premier 3016 Series regulators are high pressure high flow, piston sensed, pressure reducing regulators rated for inlet pressures up to 10000 psig / 689.5 bar *(dependent upon configuration)*, and (Cv) 1.0 or 2.0. Premier 3016 series regulators feature a balanced stem design for increased outlet pressure stability.

Premier 3016 Series regulators are available in a variety of materials for seamless integration into your desired application. Common applications include: commercial diving, and high pressure tube trailers.

FEATURES

- Self-venting and captured venting models available *(non-venting modification also available)*
- Balanced stem for increased outlet pressure stability
- High flow capacity (Cv): 1.0 or 2.0
- Piston sensed
- Great sensitivity
- Optional gauge ports
- Machined bar stock body eliminates porosity found in castings

The Premier 3016 Series pressure reducing regulator's design is remarkably flexible.
Contact Premier Industries for a custom 3016 Series regulator to meet your exact needs.

3016 SERIES

HIGH PRESSURE HIGH FLOW
Pressure Reducing Regulators

SPECIFICATIONS

- **MAXIMUM INLET PRESSURE:**
  - 17-4 STAINLESS STEEL BODY: 10000 PSIG *(689.5 bar)*
  - 316 STAINLESS STEEL BODY:
    - Cv 2.0, 6000 PSIG / 413.7 Bar
    - Cv 1.0, 10000 PSIG / 689.5 Bar
  - BRASS BODY:
    - Cv 2.0, 4000 PSIG / 275.8 bar
    - Cv 1.0, 6000 PSIG / 413.7 bar
  - MONEL BODY: 6000 PSIG / 413.7 bar
- **CONTROL PRESSURE RANGES:**
  - 0-300 PSIG *(0–20.7 bar)*
  - 0-500 PSIG *(0–34.5 bar)*
  - 0-1000 PSIG *(0–68.9 bar)*,
  - 10-1500 PSIG *(0.7–103.4 bar)*
  - 15-2500 PSIG *(1.0–172.4 bar)*
  - 25-4000 PSIG *(1.7–275.8 bar)*
  - 50-6000 PSIG *(3.5–413.7 bar)*
  - 100-10000 PSIG *(6.9–413.7 bar)*
- **FLOW (Cv):** 1.0 or 2.0
- **OPERATING TEMPERATURE:****
  - -15°F/-26°C to 165°F/74°C (BUNA-N)
  - -4°F/-20°C to 165°F/74°C (Viton®)
  - -65°F/-54°C to 165°F/74°C (EPDM)

*** Lower temperature compounds available*

MATERIALS OF CONSTRUCTION

- **BODY OPTIONS:**
  - 17-4 Stainless Steel
  - 316 Stainless Steel
  - SAE 360 Brass
  - Monel 400
- **MAIN VALVE STEM:** 17-4 Stainless Steel (hardened)
- **MAIN VALVE SEAT:** Vespel®
- **VENT VALVE SEAT:** PCTFE
- **BACK-UP RINGS:** PTFE
- **O-RING MATERIAL OPTIONS:**
  - BUNA-N
  - AFLAS®
  - Viton®
  - EPDM
  - Nitrile, low-temp
  - Kalrez® *(contact factory for pricing)*
- **OTHER WETTED PARTS:** 316 Stainless Steel, 17-4 Stainless Steel

PORTING

- **INLET & OUTLET OPTIONS:**
  - 1/4" FNPT, SAE J1926, SAE AS5202**
  - 3/8" FNPT, SAE J1926, SAE AS5202**
  - 1/2" FNPT, SAE J1926, SAE AS5202
  - 3/4" FNPT, SAE J1926, SAE AS5202

***Not recommended for Cv 2.0*

- **GAUGE PORTS:** 1/4" FNPT

OPTIONS

- Captured venting, Cv 1.0, 10000 PSIG MAX *(P/N: 30-10225)*
- Captured venting, Cv 2.0, 6000 PSIG MAX, 3/4" port option, & surface mount, no bracket/panel nuts *(P/N: 30-10228)*
- Panel mounting bracket: *P/N: 30-10059 (Ø2.15 panel hole)*
- Panel mounting nuts: *P/N: 30-10189 (Ø2.28 panel hole)*
- Non-venting option

PANEL MOUNTING BRACKET STYLE

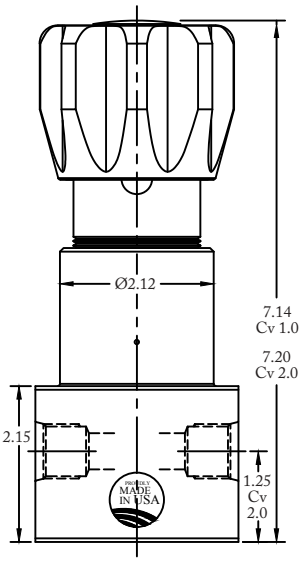

PANEL NUT STYLE

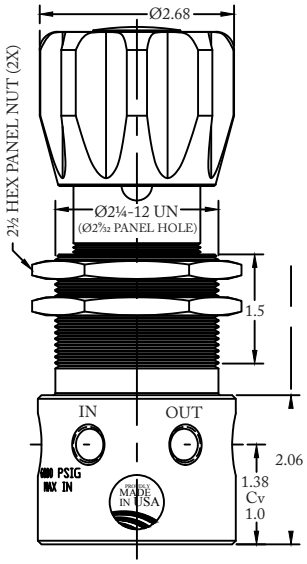

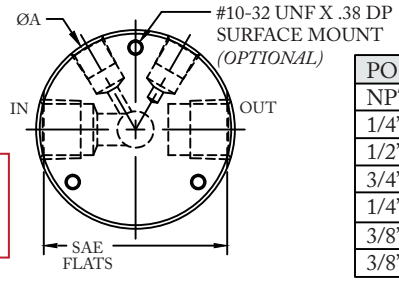

Surface mounting holes: Pattern dependent on port size, type, and configuration

PORT TYPE	ØA	FLATS
NPT	Ø2.73	——
1/4" J1926	Ø2.73	2.52
1/2" NPT Cv 2.0	Ø2.98	——
3/4" NPT Cv 2.0	Ø2.98	——
1/4"AS5202	Ø2.98	2.80
3/8" & 1/2" J1926	Ø2.98	2.80
3/8" & 1/2" AS5202	Ø3.23	3.05

(Part number 30-10216 shown above)

BALL-BEARING HAND KNOB
(Optional)

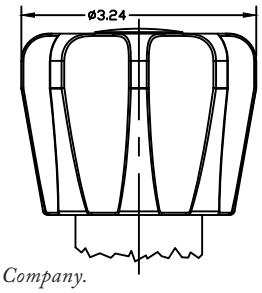

TAMPER RESISTANT ACORN NUT
(Optional)

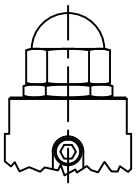

SAE AS5202 supersedes MS33649
Viton®, Vespel® and Kalrez® are registered trademarks of E.I.duPont de Nemours & Company.
AFLAS® is a registered trademark of the Asahi Glass Co., Ltd.

HIGH PRESSURE HIGH FLOW
Pressure Reducing Regulators

3016 SERIES

SELF VENTING

PART #	1 2	-	3	4	5	6	7	-	8 9	-	10	-	MODS
30-10216		-						-		-		-	

1 2	MOUNTING STYLE
MB	Mounting bracket style body
PN	Panel nut style body *(Panel nuts included)*

3	BODY/BONNET MATERIALS *(MAX. INLET PRESSURE)*
1	SAE 360 brass body & bonnet *(Cv 2.0, 4000 PSIG / 275.8 Bar)* *(Cv 1.0, 6000 PSIG / 413.7 Bar)*
2	316 stainless steel body, 17-4 stainless steel bonnet *(Cv 2.0, 6000 PSIG / 413.7 Bar)* *(Cv 1.0, 10000 PSIG / 689.5 Bar)*
4	Monel 400® body, Stainless steel bonnet *(6000 PSIG / 413.7 Bar)*
5	17-4 Stainless Steel body & bonnet *(10000 PSIG / 689.5 Bar)*

4	OUTLET PRESSURE
0	0-300 PSIG *(0-20.7 Bar)*
1	0-500 PSIG *(0-34.5 Bar)*
2	0-1000 PSIG *(0-68.9 Bar)*
3	10-1500 PSIG *(0.7-103.4 Bar)*
4	15-2500 PSIG *(1.0-172.4 Bar)*
5	25-4000 PSIG *(1.7-275.8 Bar)*
6	50-6000 PSIG *(3.5-413.7 Bar)*
7	100-10000 PSIG *(6.9-413.7 Bar)*

5	PORTING CONFIG *(gauges optional, sold separately)*
A	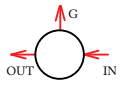
L	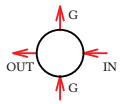
C	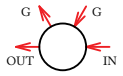
S	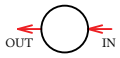

6	PORT SIZE *(Inlet/outlet)*
4	1/4"**
6	3/8"**
8	1/2"
T	3/4"

***Not recommended for Cv 2.0*
Gauge ports 1/4" FNPT

7	PORT TYPE *(Inlet/outlet)*
1	FNPT
2	SAE J1926
3	SAE AS5202

8 9	O-RING MATERIAL
00	BUNA-N
01	AFLAS®
02	VITON®
05	EPDM
11	KALREZ® *(contact factory for pricing)*
12	NITRILE, LO-TEMP

10	Cv (FLOW)
1	Cv 1.0
2	Cv 2.0

MODIFICATIONS *Separate multiple mods with a dash*	
Blank	None
ANT	Acorn nut
BBL	Ball-bearing loader
PTU	Port type uniform
NV	Non-venting
SM	Surface mount

10000 PSIG MAX INLET (17-4 stainless steel, 316 Stainless Steel Cv 1.0) 6000 PSIG MAX INLET (316 Stainless Steel Cv 2.0/Monel/Brass Cv 1.0) 4000 PSIG MAX (brass, Cv 2.0)
The end user is responsible to ensure adequate fittings are used to connect regulator to plumbing.

Kalrez® & Viton® are registered trademarks of E.I.duPont de Nemours and Company.
AFLAS® is a registered trademark of the Asahi Glass Co., Ltd. Monel is a registered trademark of Specialty Metals Corporation.
Contact factory for material certifications. Fees may apply.

3016 SERIES

HIGH PRESSURE HIGH FLOW
Pressure Reducing Regulators

CAPTURED VENTING, Cv 1.0

PART #	1 2	-	3	4	5	6	-	7 8	-	MODS
30-10225		-					-		-	

1 2	MOUNTING STYLE
MB	Mounting bracket style body
PN	Panel nut style body *(Panel nuts included)*

3	OUTLET PRESSURE
C	150 PSIG *(10.3 Bar)*
0	300 PSIG *(20.7 Bar)*
1	500 PSIG *(34.5 Bar)*
2	1000 PSIG *(68.9 Bar)*
3	1500 PSIG *(103.4 Bar)*
4	2500 PSIG *(172.4 Bar)*
5	4000 PSIG *(275.8 Bar)*
6	6000 PSIG *(413.7 Bar)*
7	10000 PSIG *(689.5 Bar)*

4	PORTING CONFIG.
A	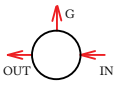
L	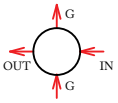
C	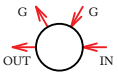
S	

5	PORT SIZE *(Inlet/outlet)*
6	3/8”
8	1/2”

Gauge ports 1/4” FNPT

6	PORT TYPE *(Inlet/outlet)*
N	FNPT
J	SAE J1926
A	SAE AS5202 *(MS33649**)*

7 8	O-RINGS
00	BUNA-N
01	AFLAS®
02	VITON®
05	EPDM
11	KALREZ® *(contact factory for pricing)*

MODIFICATIONS *Separate multiple mods with a dash*	
Blank	None
ANT	Acorn nut
BBL	Ball-bearing loader
HYD	Hydrogen (H2) Service)

***SAE AS5202 supersedes MS33649*

10000 PSIG MAX INLET
The end user is responsible to ensure adequate fittings are used to connect regulator to plumbing.

Kalrez® & Viton® are registered trademarks of E.I.duPont de Nemours and Company.
AFLAS® is a registered trademark of the Asahi Glass Co., Ltd. Monel is a registered trademark of Specialty Metals Corporation.

Contact factory for material certifications. Fees may apply.

HIGH PRESSURE HIGH FLOW
Pressure Reducing Regulators

3016 SERIES

CAPTURED VENTING, Cv 2.0

PART #	-	1	2	3	4	-	5 6	-	MODS
30-10228	-					-		-	

NOTE: this design is not available with panel mounting nuts or a panel mounting bracket. It does have a surface mounting option (see modifications).

1	OUTLET PRESSURE
0	300 PSIG *(20.7 Bar)*
1	500 PSIG *(34.5 Bar)*
2	1000 PSIG *(68.9 Bar)*
3	1500 PSIG *(103.4 Bar)*
4	2500 PSIG *(172.4 Bar)*
5	4000 PSIG *(275.8 Bar)*
6	6000 PSIG *(413.7 Bar)*
2	**PORTING CONFIG** *(gauges optional, sold separately)*
A	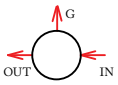
L	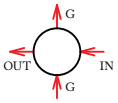
C	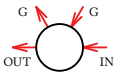
S	

3	PORT SIZE *(Inlet/outlet)*
8	1/2”
T	3/4”
4	**PORT TYPE** *(Inlet/outlet)*
1	FNPT
2	SAE J1926
3	SAE AS5202
5 6	**O-RING MATERIAL**
00	BUNA-N
01	AFLAS®
02	VITON®
05	EPDM
11	KALREZ® *(contact factory for pricing)*
12	NITRILE, LO-TEMP

MODIFICATIONS *Separate multiple mods with a dash*	
Blank	None
ANT	Acorn nut
BBL	Ball-bearing loader
PTU	Port type uniform
B	Brass
SM	Surface mount

6000 PSIG MAX INLET
The end user is responsible to ensure adequate fittings are used to connect regulator to plumbing.

Kalrez® & Viton® are registered trademarks of E.I.duPont de Nemours and Company.
AFLAS® is a registered trademark of the Asahi Glass Co., Ltd. Monel is a registered trademark of Specialty Metals Corporation.
Contact factory for material certifications. Fees may apply.

AIR LOADED HIGH PRESSURE, HIGH FLOW

Pressure Reducing Regulators

3016AL SERIES

PREMIER INDUSTRIES

1590 99th Ln NE,
Minneapolis, MN 55449
763-786-4020

MADE IN THE USA

Minneapolis, MN

DESCRIPTION

Premier 3016AL Series regulators are high pressure, high flow, piston sensed, pressure reducing regulators rated for Cv 1.0 or 2.0. This regulator features an air loader with a max inlet pressure of 100 PSIG / 6.89 bar and a balanced stem for increased outlet pressure stability.

The 3016AL regulator's captured venting allows potentially hazardous media to be safely piped away.

FEATURES

- Captured venting
- High flow capacity (Cv): 1.0 or Cv 2.0
- Balanced stem for increased outlet pressure stability
- 316 stainless steel construction
- Compatible with electro-pneumatic controllers
- Max inlet pressure: 10000 PSIG (*689.5 bar*), Cv 1.0
  6000 PSIG (*413.7 bar*), Cv 2.0
- Machined bar stock body eliminates porosity found in castings

The Premier 3016AL Series pressure reducing regulator's design is remarkably flexible.
Contact Premier Industries for a custom Premier 3016AL Series regulator to meet your exact needs.

3016AL SERIES

AIR LOADED HIGH PRESSURE, HIGH FLOW

Pressure Reducing Regulators

SPECIFICATIONS

- **MAXIMUM INLET PRESSURE:**
  - REGULATOR:
    - 10000 PSIG (*689.5 bar*), Cv 1.0 *(P/N: 30-10220)*
    - 6000 PSIG (*413.7 bar*), Cv 2.0 *(P/N: 30-10227)*
  - AIR ACTUATOR: 100 PSIG (*6.89 bar*)
- **CONTROL PRESSURE RANGES:**
  - 10-1500 PSIG *(0.69 - 103.42 bar)*
    Diameter: 1.000"
    Area: 0.7854 in²
    Ratio: 16/1 **
  - 15-2500 PSIG *(1.03 - 172.37 bar)*
    Diameter: 0.750"
    Area: 0.4418 in²
    Ratio: 28/1 **
  - 50-6000 PSIG *(3.45 - 413.69 bar)*
    Diameter: 0.500"
    Area: 0.1964 in²
    Ratio: 64/1 **
  - 100-10000 PSIG *(6.89 - 689.5 bar)* *Cv 1.0 only*
    Diameter: 0.375"
    Area: 0.1104 in²
    Ratio: 114/1 **

*** 4.0" diameter diaphragm*
Diaphragm area: 12.5664 in²

- **FLOW (Cv):**
  - MAIN VALVE: 1.0 *(P/N: 30-10220)*, 2.0 *(P/N: 30-10227)*
  - VENT VALVE: 0.06
- **AMBIENT OPERATING TEMPERATURES:**
  - -4°F/-20°C to 212°F/100°C (Viton®)*
  - -15°F/-26°C to 212°F/100°C (BUNA-N)*
  - -65°F/-54°C to 212°F/100°C (EPDM)

  **lower temperature compounds available upon request*

MATERIALS OF CONSTRUCTION

- **BODY:** 316 Stainless Steel
- **HOUSING, AIR ACTUATOR :**
  - 6061-T6 Aluminum/clear anodized
- **DIAPHRAGM, AIR ACTUATOR :**
  - Neoprene, nylon fabric-reinforced
- **MAIN VALVE SEAT:**
  - Vespel SP-1®, Cv 1.0 *(P/N: 30-10220)*
  - PCTFE, Cv 2.0 *(P/N:30-10227)*
- **VENT VALVE SEAT:** Vespel SP-1®
- **ELASTOMER SEALS:**
  - BUNA-N
  - AFLAS®
  - Viton®
  - EPDM
  - Kalrez® *(contact factory for pricing)*
- **BACK-UP RING OPTIONS:**
  - PTFE
  - PCTFE
- **OTHER WETTED PARTS:**
  - 316 Stainless Steel
  - 17-4 Stainless Steel

PORTING

- **INLET/OUTLET:**
  - 1/2" NPT, SAE AS5202**, SAE J1926
  - 9/16" MEDIUM PRESSURE
- **AIR ACTUATOR:**
  - 1/4" FNPT *(standard)*
  - 1/4" SAE AS5202
  - 1/8" FNPT
  - 1/4" SAE J1926
- **VENT:** 1/4" *(inlet/outlet port type)*
- **GAUGE PORTS:** 1/4" FNPT

OPTIONS

- Private Label

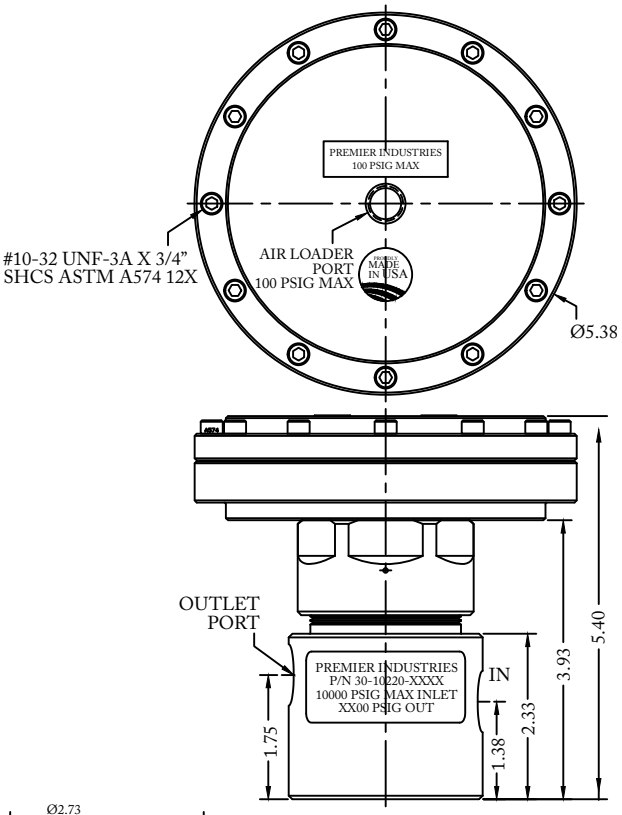

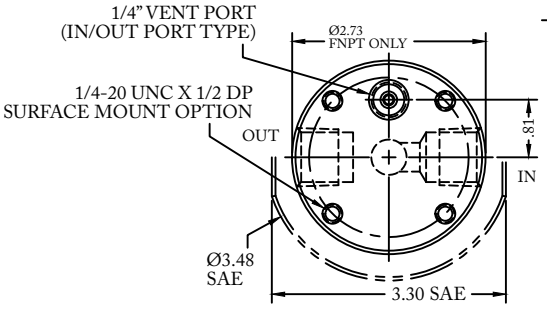

PORT TYPE	ØA	FLATS	B.C.
NPT	Ø2.73	——	Ø2.25
SAE J1926	Ø3.23	3.05	Ø2.63
SAE AS5202	Ø3.48	3.30	Ø2.75
9/16" M.P>	Ø3.48	3.30	Ø2.75

Viton® and Kalrez® are registered trademarks of E.I.duPont de Nemours and Company
AFLAS® is a registered trademark of the Asahi Glass Co., Ltd.
***SAE AS5202 supersedes MS33649 see part numbers for more porting options*

(Part number 30-10220 shown above)

AIR LOADED HIGH PRESSURE, HIGH FLOW

Pressure Reducing Regulators

3016AL SERIES

Cv 1.0 MODEL

PART #	-	1	2	3	4	-	5 6	-	MODS
30-10220	-					-		-	

1	OUTLET PRESSURE
3	10-1500 PSIG *(0.69 - 103.42 bar)* ***Diameter:*** *1.000"* ***Area:*** *0.7854 in²* ***Ratio:*** *16/1* **
4	15-2500 PSIG *(1.03 - 172.37 bar)* ***Diameter:*** *0.750"* ***Area:*** *0.4418 in²* ***Ratio:*** *28/1* **
6	50-6000 PSIG *(3.45 - 413.69 bar)* ***Diameter:*** *0.500"* ***Area:*** *0.1964 in²* ***Ratio:*** *64/1* **
7	100-10000 PSIG *(6.89 - 689.5 bar)* ***Diameter:*** *0.375"* ***Area:*** *0.1104 in²* ***Ratio:*** *114/1* **

*** 4.0" diameter diaphragm*
Diaphragm area: 12.5664 in²

2	PORTING CONFIGURATIONS
A	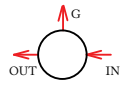
C	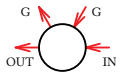
L	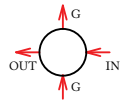
S	

3	PORT SIZE
6	3/8"*
8	1/2"*
9	9/16"**

**3/8" & 1/2" ports not available in medium pressure*
***9/16" ports only available in medium pressure*

4	PORT TYPE
N	NPT
A	SAE AS5202**
J	SAE J1926
M	MEDIUM PRESSURE

***SAE AS5202 supersedes MS33649*

5 6	O-RINGS
00	BUNA-N
01	AFLAS®
02	VITON-A®
05	EPDM
11	KALREZ® *(contact factory for pricing)*

MODIFICATIONS *Separate multiple mods with a dash*	
Blank	None
AS	1/4 SAE AS5202 loader port
E	1/8 NPT air loader port
J	1/4 SAE J1926 loader port
PTU	Port type uniform
SM	Surface mount

10000 PSIG MAX INLET
The end user is responsible to ensure adequate fittings are used to connect regulator to plumbing.

Kalrez® & Viton® are registered trademarks of E.I.duPont de Nemours and Company

AFLAS® is a registered trademark of the Asahi Glass Co., Ltd.

Contact factory for material certifications. Fees may apply.

DOME LOADED HIGH PRESSURE, HIGH FLOW

Pressure Reducing Regulators

3016DL SERIES

PREMIER INDUSTRIES

1590 99th Ln NE,
Minneapolis, MN 55449
763-786-4020

MADE IN THE USA

Minneapolis, MN

DESCRIPTION

Premier 3016DL Series regulators are dome loaded, high pressure, high flow, piston sensed, pressure reducing regulators rated for inlet pressures up to 10000 PSIG, and (Cv) 2.0. The dome must be charged (externally) from a gas pressure source (10000 PSIG MAX).

FEATURES

- High flow, (Cv): 2.0
- Piston sensed
- 1:1 dome load
- Compatible with electro-pneumatic controllers
- Machined bar stock body eliminates porosity found in castings

The Premier 3016DL Series pressure reducing regulator's design is remarkably flexible. Contact Premier Industries for a custom 3016DL Series regulator to meet your exact needs.

3016DL SERIES

DOME LOADED HIGH PRESSURE, HIGH FLOW

Pressure Reducing Regulators

SPECIFICATIONS

- **MAXIMUM INLET PRESSURE** *(regulator)*:
  - 6000 psig (413.7 bar), *316 Stainless Steel body*
  - 10000 psig (689.5 bar), *17-4 Stainless Steel body*
- **DOME:** 6000 psig (413.7 bar) max inlet
- **FLOW (Cv):** 2.0

MATERIALS OF CONSTRUCTION

- **BODY:**
  - 316 Stainless Steel
  - 17-4 Stainless Steel
- **WETTED, OTHER:**
  - 316 Stainless Steel, and 17-4 Stainless Steel
- **MAIN VALVE SEAT:**
  - Vespel SP-1®
- **VENT VALVE SEAT:**
  - Vespel SP-1®
- **BACK-UP RINGS:**
  - PTFE
  - PCTFE
- **O-RING MATERIAL OPTIONS:**
  - BUNA-N
  - AFLAS®
  - Viton-A®
  - EPDM
  - Kalrez®

PORTING

- **INLET/OUTLET:**
  - 1/2" NPT, SAE J1926, SAE AS5202
  - 9/16" medium pressure
  - 3/4" NPT, SAE J1926, SAE AS5202, medium pressure
  - 1" NPT, SAE J1926, SAE AS5202
- **GAUGE PORTS:**
  - 1/4" FNPT
- **DOME INLET:**
  - 1/4" *(inlet/outlet port type)*
- **VENT PORT:**
  - 1/4" *(inlet/outlet port type)*

PORT TYPE	ØA	FLATS	B.C.
1/2" & 3/4"NPT	Ø2.98	——	Ø2.50
1/2" SAE	Ø3.23	3.05	Ø2.63
1" NPT	Ø3.48	——	Ø2.75
9.16" medium pressure	Ø3.48	3.30	Ø2.75
3/4" SAE J1926	Ø3.73	3.36	Ø3.00
3/4" SAE AS5202	Ø3.98	3.60	Ø3.25
3/4" medium pressure	Ø3.98	3.60	Ø3.25
1" SAE	Ø3.98	3.60	Ø3.25
'L' CONFIGURATION BODIES TYPICALLY REQUIRE A LARGER ØA			

OPTIONS

- Private Label
- Surface mount
- Port type uniform

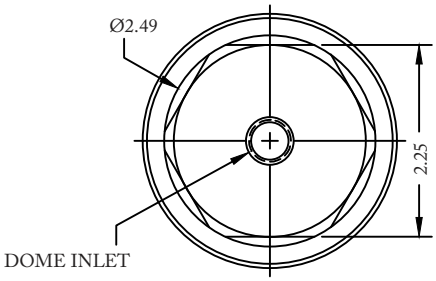

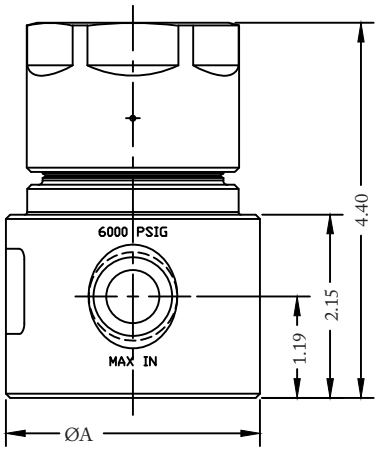

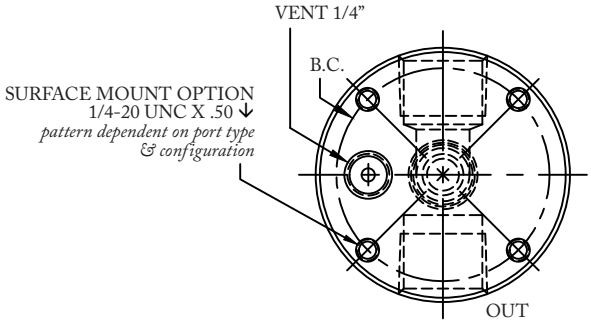

(Part number 30-10227DL shown above with 3/4" NPT ports)

Viton®, Vespel® and Kalrez® are registered trademarks of E.I.duPont de Nemours and Company
AFLAS® is a registered trademark of the Asahi Glass Co., Ltd

DOME LOADED HIGH PRESSURE, HIGH FLOW
Pressure Reducing Regulators

3016DL SERIES

PART NUMBER	-	1	2	3	4	-	5 6	-	MODS
30-10227DL	-					-		-	

1	OUTLET PRESSURE
6	50-6000 PSIG *(3.5-413.7 bar)*
7	100-10000 PSIG *(6.89-689.5 bar)*

2	PORTING CONFIG.
A	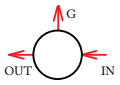
L	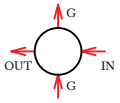
C	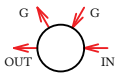
S	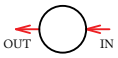

3	PORT SIZE *(Inlet/outlet)*
8	1/2"*
9	9/16"**
T	3/4"
W	1"

**1/2" not available in medium pressure*
*** 9/16" only available in medium pressure*

4	PORT TYPE *(Inlet/outlet/vent)*
N	NPT
J	SAE J1926
A	SAE AS5202
M	Medium pressure

5 6	O-RINGS
00	BUNA-N
01	AFLAS®
02	VITON-A®
05	EPDM
11	KALREZ® *(contact factory for pricing)*

MODIFICATIONS *Separate multiple mods with a dash*	
Blank	None
SM	Surface mount
PTU	Port type uniform

6000 PSIG MAX INLET (316 SS) 10000 PSIG MAX INLET (17-4 SS)
The end user is responsible to ensure adequate fittings are used to connect regulator to plumbing. SAE J1926 & AS5202 are not recommended for 10000 psig.

Kalrez® & Viton® are registered trademarks of E.I.duPont de Nemours and Company.
AFLAS® is a registered trademark of the Asahi Glass Co., Ltd. Monel is a registered trademark of Specialty Metals Corporation.
Contact factory for material certifications. Fees may apply.

HIGH PRESSURE LOW-TORQUE HAND KNOB

Pressure Reducing Regulators

3020 SERIES

PREMIER INDUSTRIES

1590 99th Ln NE,
Minneapolis, MN 55449
763-786-4020

MADE IN THE USA

Minneapolis, MN

DESCRIPTION

The high pressure Premier 3020 Series pressure reducing regulators are single stage, piston sensed, variable delivery, pressure reducing regulators, designed for inlet and outlet pressures up to 10000 PSIG *(689.5 Bar)*, and Cv 0.04, 0.06, 0.12, 0.2, or, 0.3. This regulator features an easily adjusted, ball bearing hand knob for smooth adjustments.

Premier 3020 Series regulators are used to regulate a broad range of non-corrosive and corrosive media (based on materials of construction). They are designed for increased serviceability and reliable operation with the integral 15 micron stainless steel valve cartridge filter. Premier 3020 Series regulators can be supplied with a wide range of inlet and outlet configurations.

FEATURES

- Low-torque hand knob
- 15 micron stainless steel valve cartridge filter
- Self venting design *(venting can easily be rendered non-operational)*
- Numerous optional features are available
- Captured venting available
- Machined bar stock body, bonnet and piston eliminates porosity found in castings
- Economical pricing

APPLICATIONS

- Chemical injection
- Wellhead control panel
- Subsea valve actuation
- Hydraulic Power Units (HPU)

The Premier 3020 Series pressure reducing regulator's design is remarkably flexible. Contact Premier Industries for a custom 3020 Series regulator to meet your exact needs.

3020 SERIES

HIGH PRESSURE LOW-TORQUE HAND KNOB

Pressure Reducing Regulators

SPECIFICATIONS

- **MAXIMUM INLET PRESSURE *(SS)* :** 10000 PSIG *(689.5 Bar)*
- **MAXIMUM INLET PRESSURE *(BRASS)* :** 6000 PSIG *(413.7 Bar)*
- **CONTROL PRESSURE RANGES:**
  - 0-200 PSIG *(0-13.8 Bar)*
  - 5-500 PSIG *(0.35-34.5 Bar)*
  - 5-800 *(0.35-55.2 Bar)*
  - 10-1500 PSIG *(0.69-103.4 Bar)*
  - 15-2500 PSIG *(1.0-172.4 Bar)*
  - 25-4000 PSIG *(1.7-275.8 Bar)*
  - 50-6000 PSIG *(3.4-413.7 Bar)*
  - 100-10000 PSIG *(6.9-689.5 Bar)*
- **FLOW (Cv):** 0.04, 0.06, 0.12, 0.2, or 0.3
- **OPERATING TEMPERATURES:**
  - BUNA-N: -15°F / -26°C* to 165°F / 74°C
  - Viton®: -4°F / -20°C* to 165°F / 74°C
  - EPDM: -65°F / -54°C to 165°F / 74°C

  ** lower temperature compounds are available*

MATERIALS OF CONSTRUCTION

- **BODY**:
  - 316 Stainless Steel
  - SAE 360 Brass
- **BONNET**:
  - 17-4 Stainless Steel
  - SAE 360 Brass
- **OTHER WETTED PARTS**:
  - 316 Stainless Steel
- **O-RING MATERIAL OPTIONS**:
  - Viton®
  - Buna-N
  - EPDM
  - Kalrez® *(contact factory for pricing)*
  - AFLAS®
  - Nitrile, lo-temp
- **BACK-UP RINGS**:
  - PTFE, and PCTFE
- **MAIN VALVE**:
  - 316 Stainless Steel
- **MAIN VALVE SEAT**:
  - Vespel® *(standard)*

PORTING

- **INLET/OUTLET PORTING OPTIONS**:
  - 1/4", 3/8", 1/2" FNPT
  - 1/4", 3/8", 1/2" SAE J1926
  - 1/4", 3/8", 1/2" SAE AS5202**
  - 1/4", 3/8", 9/16" Medium Pressure
  - 1/4", 3/8", 9/16" High Pressure

OPTIONS

- Gauges
- Captured venting
- Private label
- Panel mounting bracket: *P/N: 30-10059 (Ø2.15 panel hole)*

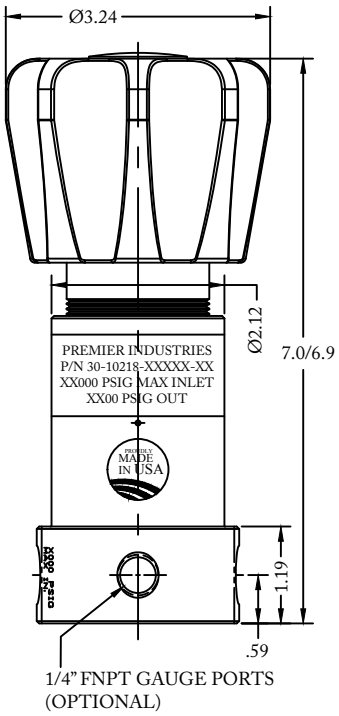

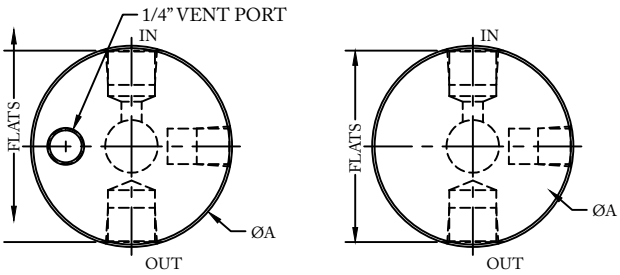

(Part Number: 30-10218GC) *(Part Number: 30-10218G)*

PORT TYPE	ØA	FLATS
NPT, NPTF	Ø2.48	——
1/4" M.P. & H.P.	Ø2.48	2.36
1/4" & 3/8" SAE	Ø2.98	2.81
3/8" M.P. & H.P.	Ø2.98	2.81
1/2" SAE	Ø3.23	2.98
9/16" M.P.	Ø3.23	2.98

***SAE AS5202 supersedes MS33649*

Vespel® Kalrez® & Viton® are registered trademarks of E.I.duPont de Nemours and Company
Aflas® is a registered trademark of the Asahi Glass Co., Ltd. PEEK® is a registered trademark of Victrex PLC

HIGH PRESSURE LOW-TORQUE HAND KNOB

Pressure Reducing Regulators

3020 SERIES

SELF-VENTING *(non-venting modification available)*

SERIES	-	1	2	3	4	5	-	6 7	8	-	MODS
30-10218G	-						-			-	

1	BODY/BONNET MATERIALS *(MAX. INLET PRESSURE)*
1	SAE 360 Brass Body & Bonnet *(6000 PSIG / 413.7 Bar)*
2	316SS Body, 17-4SS Bonnet *(10000 PSIG / 689.5 Bar)*

2	OUTLET PRESSURE
0	0-200 PSIG *(0-13.8 Bar)*
1	5-500 PSIG *(0.34-34.5 Bar)*
2	5-800 PSIG *(0.34-55.2 Bar)*
3	10-1500 PSIG *(0.69-103.4 Bar)*
4	15-2500 PSIG *(1.0-172.4 Bar)*
5	25-4000 PSIG *(1.7-275.8 Bar)*
6	50-6000 PSIG *(3.4-413.7 Bar)*
7	100-10000 PSIG *(6.9-689.5 Bar) (stainless steel only)*

Self-venting feature can be rendered non-functional.

10000 PSIG MAX INLET
The end user is responsible to ensure adequate fittings are used to connect regulator to plumbing.

Kalrez® & Viton® are registered trademarks of E.I.duPont de Nemours and Company
AFLAS® is a registered trademark of the Asahi Glass Co., Ltd.
PEEK® is a registered trademark of Victrex PLC

Contact factory for material certifications. Fees may apply.

3	FLOW (Cv)
0	Cv 0.06
1	Cv 0.12
2	Cv 0.2
3	Cv 0.3
4	Cv 0.04

4	PORT SIZE *Gauge ports 1/4" FNPT*
4	1/4"
6	3/8"
8	1/2"*
9	9/16"**

**1/2" not available in medium pressure*
***9/16" only available in medium pressure.*

5	PORT TYPE
1	FNPT
2	SAE J1926
3	SAE AS5202
4	Medium Pressure
5	High Pressure

***SAE AS5202 supersedes MS33649*

6 7	O-RINGS
00	BUNA-N
01	AFLAS
02	VITON®
05	EPDM
11	KALREZ® *(contact factory for pricing)*
12	NITRILE, LO-TEMP

8	PORT CONFIGURATION
A	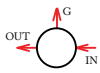
C	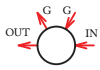
L	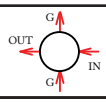
S	

MODIFICATIONS

Separate multiple mods with a dash

Blank	none
SM	surface mount*
PTU	port type uniform
PK	PEEK® seat
NV	Non-venting

**Surface mount: pattern dependent on port type, size, and configuration*

3020 SERIES

HIGH PRESSURE LOW-TORQUE HAND KNOB

Pressure Reducing Regulators

REGULATORS, VALVES, AND TORCHES
PREMIER INDUSTRIES
MINNEAPOLIS • MINNESOTA • USA

CAPTURED VENTING

SERIES	-	1	2	3	4	5	-	6 7	8	-	MODS
30-10218GC	-						-			-	

1	BODY/BONNET MATERIALS *(MAX. INLET PRESSURE)*
1	SAE 360 Brass Body & Bonnet *(6000 PSIG / 413.7 Bar)*
2	316SS Body, 17-4SS Bonnet *(10000 PSIG / 689.5 Bar)*

2	OUTLET PRESSURE
0	0-200 PSIG *(0-13.8 Bar)*
1	5-500 PSIG *(0.34-34.5 Bar)*
2	5-800 PSIG *(0.34-55.2 Bar)*
3	10-1500 PSIG *(0.69-103.4 Bar)*
4	15-2500 PSIG *(1.0-172.4 Bar)*
5	25-4000 PSIG *(1.7-275.8 Bar)*
6	50-6000 PSIG *(3.4-413.7 Bar)*
7	100-10000 PSIG *(6.9-689.5 Bar) (stainless steel only)*

3	FLOW (Cv)
0	Cv 0.06
1	Cv 0.12
2	Cv 0.2
3	Cv 0.3
4	Cv 0.04

4	PORT SIZE *Gauge ports 1/4" FNPT*
4	1/4"
6	3/8"
8	1/2"*
9	9/16"**

**1/2" not available in medium pressure*
***9/16" only available in medium pressure.*

5	PORT TYPE
1	FNPT
2	SAE J1926
3	SAE AS5202
4	Medium Pressure
5	High Pressure

***SAE AS5202 supersedes MS33649*

6 7	O-RINGS
00	BUNA-N
01	AFLAS
02	VITON®
05	EPDM
11	KALREZ® *(contact factory for pricing)*
12	NITRILE, LO-TEMP

8	PORT CONFIGURATION
A	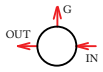
C	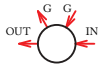
L	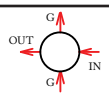
S	

MODIFICATIONS

Separate multiple mods with a dash

Blank	none
SM	surface mount*
PTU	port type uniform
PK	PEEK® seat

**Surface mount: pattern dependent on port type, size, and configuration*

10000 PSIG MAX INLET

The end user is responsible to ensure adequate fittings are used to connect regulator to plumbing.

Kalrez® & Viton® are registered trademarks of E.I.duPont de Nemours and Company
AFLAS® is a registered trademark of the Asahi Glass Co., Ltd.
PEEK® is a registered trademark of Victrex PLC

Contact factory for material certifications. Fees may apply.

HIGH PRESSURE
15000 PSIG
Pressure Reducing Regulators

3023 SERIES

PREMIER INDUSTRIES

1590 99th Ln NE,
Minneapolis, MN 55449
763-786-4020

MADE IN THE USA
Minneapolis, MN

DESCRIPTION

The high pressure Premier 3023 Series pressure reducing regulators are single stage, piston sensed, variable delivery, pressure reducing regulators, designed for inlet and outlet pressures up to 15000 PSIG *(1034.21 bar)* and Cv 0.06, 0.12, 0.20, or 0.30.

Premier 3023 Series regulators are used to regulate a broad range of non-corrosive and corrosive media (based on materials of construction). The regulator's captured venting allows gases to be safely piped away. Premier 3023 Series regulators can be supplied with a wide range of inlet and outlet configurations.

FEATURES

- Captured venting
- 15000 PSIG *(1034.21 bar)* MAX
- Cv 0.06, 0.12, 0.20, or 0.30
- Numerous optional features
- Economical pricing
- Machined bar stock body, bonnet and piston eliminates porosity found in castings

The Premier 3023 Series pressure reducing regulator's design is remarkably flexible. Contact Premier Industries for a custom 3023 Series regulator to meet your exact needs.

3023 SERIES

HIGH PRESSURE 15000 PSIG

Pressure Reducing Regulators

SPECIFICATIONS

- **MAX INLET PRESSURE (SS):** 15000 PSIG *(1034.21 bar)*
- **CONTROL PRESSURE RANGES:**
  - 5-500 PSIG *(0.34 - 34.47 bar)*,
  - 5-1000 PSIG *(0.34 - 68.95 bar)*,
  - 10-1500 PSIG *(0.69 - 103.42 bar)*,
  - 15-2500 PSIG *(1.03 - 172.37 bar)*,
  - 25-4000 PSIG *(1.72 - 275.79 bar)*,
  - 50-6000 PSIG *(3.45 - 413.69 bar)*,
  - 100-10000 PSIG *(6.89 - 689.48 bar)*,
  - 300-15000 PSIG *(20.68 - 1034.21 bar)*
- **FLOW (Cv):** 0.06, 0.12, 0.20, or 0.30
- **OPERATING TEMPERATURE:**
  - -15°F/-26°C to 165°F/74°C (BUNA-N)
  - -4°F/-20°C to 165°F/74°C (VITON®)
  - -65°F/-54°C to 165°F/74°C (EPDM)
  - 15°F/-9°C to 165°F/74°C (AFLAS)
  - -65°F/-54°C to 165°F/74°C (NITRILE)

MATERIALS OF CONSTRUCTION

- **BODY** : 316 Stainless Steel,
- **BONNET**: 17-4 Stainless Steel
- **WETTED PARTS, OTHER**:
  - 316 Stainless Steel,
  - 17-4 Stainless Steel
- **BACK-UP RINGS**: PTFE, PCTFE
- **VALVE SEAT**: Vespel®

PORTING

- **INLET/OUTLET/**
  - 1/4" FNPT *(standard)*, medium pressure, high pressure
  - 3/8" FNPT, medium pressure, high pressure
  - 9/16" medium pressure
- **VENT PORTING**:
  - 1/4" FNPT *(standard)*
  - 1/4" Medium pressure
  - 1/4" High pressure
- **GAUGE PORTS:** 1/4" FNPT

OPTIONS

- Gauges
- Private label
- Panel mounting bracket: *P/N: 30-10059 (Ø2.15 panel hole)*
- Panel mounting nuts: *P/N: 30-10189 (Ø2.28 panel hole)*
- Captured vent port
- Air operated design
- Dome loaded design
- Tamper resistant acorn nut

PANEL NUT STYLE

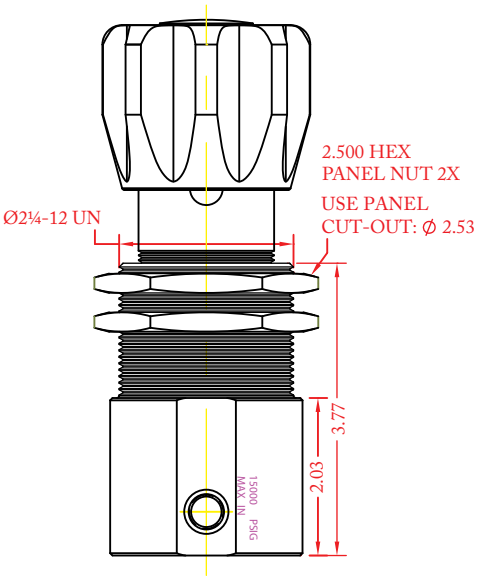

PANEL MOUNTING BRACKET STYLE

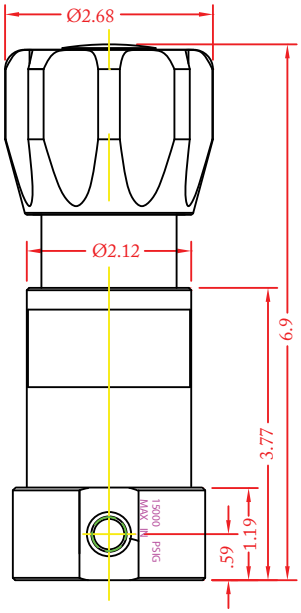

(Part number 30-10213G shown above)

OPTIONAL BALL BEARING LOADER OR TAMPER RESISTANT ACORN NUT

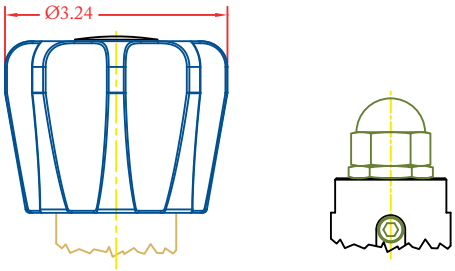

PANEL MOUNTING BRACKET *(optional)*

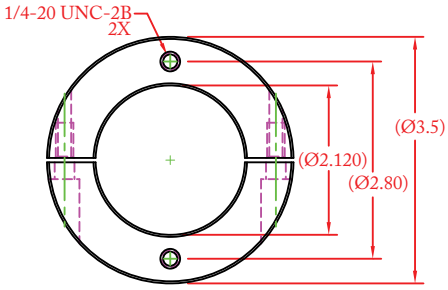

(Part number 30-10059 shown above)

Vespel® & Viton® are registered trademarks of E.I.duPont de Nemours and Company

HIGH PRESSURE
15000 PSIG
Pressure Reducing Regulators

3023 SERIES

SERIES	1 2	-	3	4	5	6	-	7 8	9	-	MODS
30-10213G		-					-			-	

1 2	MOUNTING STYLE
MB	Mounting bracket style body
PN	Panel nut style body
3	**OUTLET PRESSURE**
1	5-500 PSIG / *0.34-34.5 Bar*
2	5-1000 PSIG / *0.34-68.9 Bar*
3	10-1500 PSIG / *0.69-103.4 Bar*
4	15-2500 PSIG / *1.0-172.4 Bar*
5	25-4000 PSIG / *1.7-275.8 Bar*
6	50-6000 PSIG / *3.4-413.7 Bar*
7	100-10000 PSIG / *6.9-689.5 Bar* *(stainless steel only)*
8	300-15000 PSIG / *20.68-1034.21 Bar* *(stainless steel only)*

4	PORTING CONFIG.
A	
L	
C	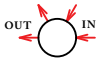
S	
E	
5	**PORT SIZE** *(Gauge ports 1/4" FNPT)*
4	1/4"
6	3/8"
9	9/16" *(only available in medium pressure)*
6	**PORT TYPE** *(1/4" vent port)*
1	FNPT
4	Medium Pressure
5	High Pressure

7 8	O-RINGS
00	BUNA-N
01	AFLAS®
02	VITON®
05	EPDM
11	KALREZ® *(contact factory for pricing)*
12	NITRILE, LO-TEMP
9	**Cv MAIN VALVE** *(Valve seat material)*
0	Cv 0.06 *VESPEL®*
1	Cv 0.12 *VESPEL®*
2	Cv 0.20 *VESPEL®*
3	Cv 0.30 *VESPEL®*

MODIFICATIONS *Separate multiple mods with a dash*	
Blank	None
BBL	Ball-bearing loader
ANT	Acorn nut

15000 PSIG MAX INLET
The end user is responsible to ensure adequate fittings are used to connect regulator to plumbing.

Vespel® Kalrez® & Viton® are registered trademarks of E.I.duPont de Nemours and Company
AFLAS® is a registered trademark of the Asahi Glass Co., Ltd

Contact factory for material certifications. Fees may apply.

HIGH PRESSURE AIR LOADED 15000 PSIG

Pressure Reducing Regulators

3023AL SERIES

PREMIER INDUSTRIES

1590 99th Ln NE,
Minneapolis, MN 55449
763-786-4020

MADE IN THE USA

Minneapolis, MN

DESCRIPTION

The high pressure, air loaded, Premier 3023AL Series pressure reducing regulators are single stage, piston sensed, pressure reducing regulators, designed for inlet and outlet pressures up to 15000 PSIG *(1034.21 bar)* and Cv 0.06, or 0.12.

Premier 3023AL Series Regulators are designed for compatibility with electropneumatic controllers, enabling piloted pressure control from an inert gas at low pressures *(100 psig / 6.89 bar max air load)*.

Premier 3023AL Series regulators are used to regulate a broad range of non-corrosive and corrosive media (based on materials of construction). Captured venting is standard.

FEATURES

- Compatible with electro-pneumatic controllers
- 15000 PSIG *(1034.21 bar)* MAX
- Captured venting
- Cv 0.06, or 0.12
- Numerous optional features
- Economical pricing
- Machined bar stock body, bonnet and piston eliminates porosity found in castings

The Premier 3023AL Series pressure reducing regulator's design is remarkably flexible. Contact Premier Industries for a custom 3023AL Series regulator to meet your exact needs.

3023AL SERIES

HIGH PRESSURE AIR LOADED 15000 PSIG

Pressure Reducing Regulators

SPECIFICATIONS

- **MAX INLET PRESSURE:**
  - REGULATOR: 15000 PSIG / 1034.21 bar *(stainless steel)*
  - AIR ACTUATOR: 100 PSIG *(6.89 bar)*
- **CONTROL PRESSURE RANGES:**
  - 10-1500 PSIG *(0.69 - 103.42 bar)*
    Diameter: 1.000"
    Area: 0.7854 in²
    *Ratio: 16/1 ***
  - 15-2500 PSIG *(1.03 - 172.37 bar)*
    Diameter: 0.750"
    Area: 0.4418 in²
    *Ratio: 28/1 ***
  - 50-6000 PSIG *(3.45 - 413.69 bar)*
    Diameter: 0.500"
    Area: 0.1964 in²
    *Ratio: 64/1 ***
  - 100-10000 PSIG *(6.89 - 689.5 bar)*
    Diameter: 0.375"
    Area: 0.1104 in²
    *Ratio: 114/1 ***
  - 300-15000 PSIG *(20.68 - 1034.21 bar)*
    Diameter: 0.312"
    Area: 0.0765 in²
    *Ratio: 164/1 ***

*** 4.0" diameter diaphragm*
Diaphragm area: 12.5664 in²

- **FLOW (Cv):** 0.06, 0.12
- **VENT VALVE Cv:** 0.06
- **OPERATING TEMPERATURE:**
  - -15°F/-26°C to 212°F/100°C (BUNA-N)
  - -4°F/-20°C to 212°F/100°C (VITON®)
  - -65°F/-54°C to 212°F/100°C (EPDM)
  - 15°F/-9°C to 212°F/100°C (AFLAS)

MATERIALS OF CONSTRUCTION

- **BODY**:
  - 316 Stainless Steel
- **HOUSING, AIR ACTUATOR**:
  - 6061-T6 Aluminum, Clear Anodized
- **DIAPHRAGM, AIR ACTUATOR**:
  - Neoprene, nylon reinforced
- **WETTED PARTS, OTHER**:
  - 316 Stainless Steel
  - 17-4 Stainless Steel
- **BACK-UP RINGS**: PTFE, PCTFE
- **MAIN VALVE SEAT/VENT VALVE SEAT OPTIONS**:
  - Vespel®
- **MAIN/VENT VALVE STEM**:
  - 17-4 Stainless Steel, hardened

PORTING

- **INLET/OUTLET PORTING OPTIONS**:
  - 1/4", 3/8" FNPT *(standard)*
  - 1/4", 3/8", 9/16" Medium Pressure
  - 1/4", 3/8" High Pressure
- **VENT PORT:** 1/4" inlet/outlet port type
- **LOAD PORT:**
  - 1/4" NPT *(standard)*
  - 1/4" SAE AS5202
  - 1/4" SAE J1926
  - 1/8" NPT

OPTIONS

- Gauges
- Private label
- Panel mounting bracket: *P/N: 30-10059*
  (Ø2.15 panel hole)

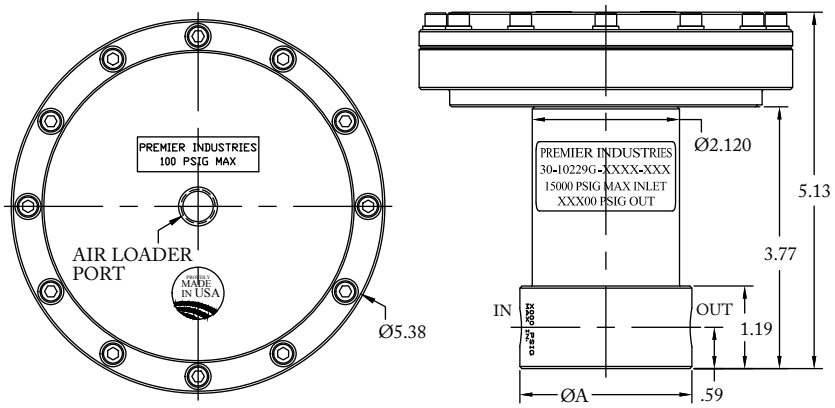

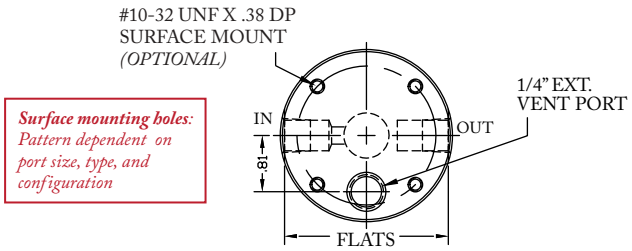

***Surface mounting holes**: Pattern dependent on port size, type, and configuration*

(Part number: 30-10229G shown above)

PORT TYPE	ØA	FLATS
NPT	Ø2.48	——
1/4" OTHER	Ø2.48	2.36
3/8" M.P.	Ø2.98	2.81
3/8" H.P.	Ø3.23	2.98
9/16" M.P.	Ø3.23	2.98

Vespel® Kalrez® & Viton® are registered trademarks of E.I.duPont de Nemours and Company
AFLAS® is a registered trademark of the Asahi Glass Co., Ltd

HIGH PRESSURE AIR LOADED 15000 PSIG

Pressure Reducing Regulators

3023AL SERIES

PART #	-	1	2	3	4	-	5 6	7	-	MODS
30-10229G	-					-			-	

1	OUTLET PRESSURE	
3	10-1500 PSIG *0.69-103.4 Bar*	***Diameter:** 1.000”* ***Area:** 0.7854 in²* ***Ratio:** 16/1 **
4	15-2500 PSIG *1.0-172.4 Bar*	***Diameter:** 0.750”* ***Area:** 0.4418 in²* ***Ratio:** 28/1 **
6	50-6000 PSIG *3.4-413.7 Bar*	***Diameter:** 0.500”* ***Area:** 0.1964 in²* ***Ratio:** 64/1 **
7	100-10000 PSIG *6.9-689.5 Bar* *(stainless steel only)*	***Diameter:** 0.375”* ***Area:** 0.1104 in²* ***Ratio:** 114/1 **
8	300-15000 PSIG *20.68-1034.21 Bar* *(stainless steel only)*	***Diameter:** 0.312”* ***Area:** 0.0765 in²* ***Ratio:** 164/1 **

*** 4.0” diameter diaphragm*
Diaphragm area: 12.5664 in²

2	PORTING CONFIGURATION
A	
L	
C	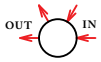
S	
E	
3	**PORT SIZE**
4	1/4”
6	3/8”
9	9/16”** *(Only available in medium pressure)*
4	**PORT TYPE** *(1/4” vent port)*
1	FNPT
4	Medium Pressure
5	High Pressure

5 6	O-RINGS
00	BUNA-N
01	AFLAS®
02	VITON-A®
05	EPDM
11	KALREZ® *(contact factory for pricing)*
7	**Cv MAIN VALVE** *(Valve seat material)*
0	Cv 0.06 *(VESPEL®)*
1	Cv 0.12 *(VESPEL®)*

MODIFICATIONS *Separate multiple mods with a dash*	
BLANK	None
AS	1/4” SAE AS5202 LOADER PORT
E	1/8” NPT AIR LOADER PORT
J	1/4” SAE J1926 LOADERPORT
SM	SURFACE MOUNT

15000 PSIG MAX INLET
The end user is responsible to ensure adequate fittings are used to connect regulator to plumbing.

Vespel® Kalrez® & Viton® are registered trademarks of E.I.duPont de Nemours and Company
AFLAS® is a registered trademark of the Asahi Glass Co., Ltd

Contact factory for material certifications. Fees may apply.

DOME LOADED HIGH PRESSURE 15000 PSIG

Pressure Reducing Regulators

3023DL SERIES

PREMIER INDUSTRIES

1590 99th Ln NE,
Minneapolis, MN 55449
763-786-4020

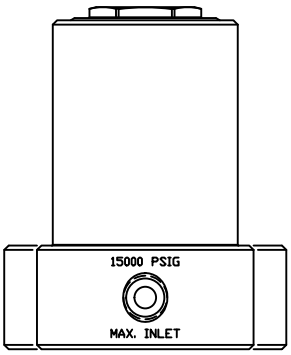

MADE IN THE USA

Minneapolis, MN

DESCRIPTION

Premier 3023DL Series pressure reducing regulators are dome loaded, high pressure, piston sensed, pressure reducing regulators, designed for inlet pressures up to 15000 PSIG *(1034.21 bar)* and Cv 0.06, 0.12, or 0.2. Captured venting allows fluids/gases to be safely piped away.

FEATURES

- Captured venting
- 15000 PSIG *(1034.21 bar)* max inlet
- Outlet pressures up to 15000 PSIG
- 1:1 load ratio
- Piston: Ø1.125
- Cv 0.06, 0.12, or 0.2.
- Machined bar stock body, bonnet and piston eliminates porosity found in castings

The Premier 3023DL Series pressure reducing regulator's design is remarkably flexible.
Contact Premier Industries for a custom 3023DL Series regulator to meet your exact needs.

3023DL SERIES

DOME LOADED HIGH PRESSURE 15000 PSIG

Pressure Reducing Regulators

SPECIFICATIONS

- **MAX INLET PRESSURE:** 15000 PSIG *(1034.21 bar)*
- **MAX OUTLET PRESSURE:** 15000 PSIG *(1034.21 bar)*
- **MAX DOME LOAD:** 15000 PSIG *(1034.21 bar)*
- **FLOW (Cv):** 0.06, 0.12, 0.20
- **VENT VALVE (Cv):** 0.06
- **OPERATING TEMPERATURE:**
  - -15˚F/-26˚C to 165˚F/74˚C (BUNA-N)
  - -4˚F/-20˚C to 165˚F/74˚C (VITON®)
  - -65˚F/-54˚C to 165˚F/74˚C (EPDM)

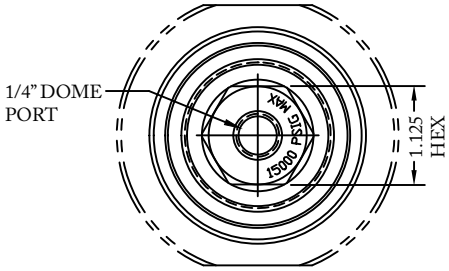

MATERIALS OF CONSTRUCTION

- **BODY**: 316 Stainless Steel
- **MAIN VALVE SEAT**:
  - Vespel® SP-1 or Vespel® SCP-5000
- **VENT VALVE SEAT**:
  - Vespel® SP-1 or Vespel® SCP-5000
- **MAIN VALVE / VENT VALVE STEM:**
  - 17-4 Stainless Steel (hardened)
- **O-RING MATERIAL**:
  - BUNA-N
  - AFLAS®
  - Viton®
  - EPDM
  - Kalrez® *(Contact factory for pricing)*
- **BACK-UP RINGS**: PCTFE
- **WETTED PARTS, OTHER**:
  - 316 Stainless Steel,
  - 17-4 Stainless Steel

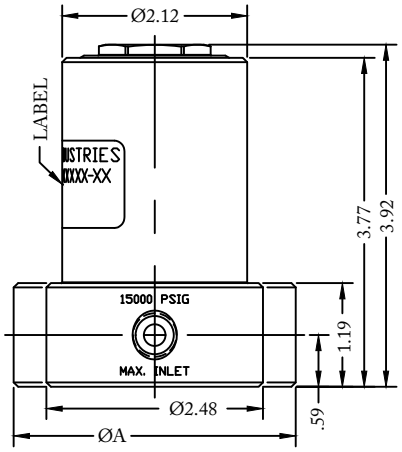

PORTING

- **INLET PORTING**:
  - 1/4", 3/8", 1/2" FNPT
  - 1/4", 3/8", 9/16" MEDIUM PRESSURE
  - 1/4", 3/8", HIGH PRESSURE
- **GAUGE PORT:** 1/4" FNPT

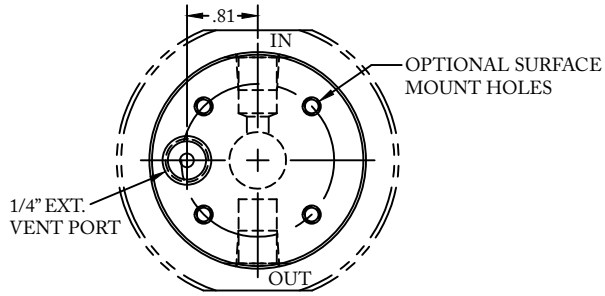

OPTIONS

- Private label
- Panel mounting bracket *(P/N: 30-10059)*
- Surface mount
- Port type uniform

PORT TYPE	ØA	FLATS
NPT	Ø2.48	——
1/4" M.P. & H.P.	Ø2.48	2.36
3/8" M.P. & H.P.	Ø2.98	2.81
9/16" M.P.	Ø3.23	2.98

3/8" & larger "L" configuration bodies require a larger ØA

(Part number 30-10229DLG shown above)

Vespel® Kalrez® & Viton-A® are registered trademarks of E.I.duPont de Nemours and Company
AFLAS® is a registered trademark of the Asahi Glass Co., Ltd.

DOME LOADED HIGH PRESSURE 15000 PSIG

Pressure Reducing Regulators

3023DL SERIES

SERIES	-	1	2	3	4	5	-	7 8	-	MODS
30-10229DLG	-						-		-	

1	MAX OUTLET PRESSURE
8	15000 PSIG
2	**Cv : MAIN VALVE/ VALVE SEAT MATERIAL**
0	Cv 0.06 / Vespel® SP-1
1	Cv 0.12 / Vespel® SP-1
2	Cv 0.20 / Vespel® SCP-5000
3	**PORTING CONFIG.**
A	
L	
C	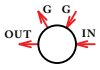
S	

Optional gauge ports: 1/4" FNPT (standard)
Dome port: 1/4" IN/OUT/VENT type

4	PORT SIZE
4	1/4"
6	3/8"
8	1/2"*
9	9/16"**

**1/2" not available in M.P. & H.P.*
***9/16" only available in M.P.*

5	PORT TYPE *(IN, OUT, VENT, DOME)*
1	FNPT
4	Medium Pressure
5	High Pressure

6 7	O-RINGS
00	BUNA-N
01	AFLAS®
02	VITON®
05	EPDM
11	KALREZ® *(Contact factory for pricing)*

MODIFICATIONS	
Blank	None
PTU	PORT TYPE UNIFORM
SM	SURFACE MOUNT

15000 PSIG MAX INLET
The end user is responsible to ensure adequate fittings are used to connect regulator to plumbing.

Vespel® Kalrez® & Viton® are registered trademarks of E.I.duPont de Nemours and Company
AFLAS® is a registered trademark of the Asahi Glass Co., Ltd

Contact factory for material certifications. Fees may apply.

HIGH PRESSURE
20000 PSIG
Pressure Reducing Regulators

3025 SERIES

PREMIER INDUSTRIES

1590 99th Ln NE,
Minneapolis, MN 55449
763-786-4020

MADE IN THE USA
Minneapolis, MN

DESCRIPTION

Premier 3025 Series high pressure, pressure reducing regulators are single stage, pneumatic, piston sensed pressure reducing regulators. 3025 Series regulators are rated for inlet and outlet pressures up to 20000 PSIG *(1378.95 bar)*, and Cv 0.04. The 3025 series regulator features a low torque, ball-bearing hand knob, and optional mounting styles to ensure a smooth integration into your high pressure application. Captured venting standard.

FEATURES

- Rated for pressures up to 20000 PSIG *(1378.95 bar)*
- Flow capacity (Cv): 0.04
- Captured venting
- Low torque, ball-bearing hand knob
- Optional panel mounting bracket style body or threaded body with panel mounting nuts
- Very competitive pricing
- Machined bar stock body, bonnet and piston eliminates porosity found in castings

The Premier 3025 Series pressure reducing regulator's design is remarkably flexible.
Contact Premier Industries for a custom 3025 Series regulator to meet your exact needs.

3025 SERIES

HIGH PRESSURE
20000 PSIG
Pressure Reducing Regulators

SPECIFICATIONS

- **MAXIMUM INLET PRESSURE:** 20000 PSIG *(1378.95 bar)*
- **CONTROL PRESSURE RANGE:**
  - 25-3000 PSIG *(1.72 - 206.84 bar)*
  - 50-6000 PSIG *(3.45 - 413.69 bar)*
  - 100-10000 PSIG *(6.89 - 689.48 bar)*
  - 300-15000 PSIG *(20.68 - 1034.21 bar)*
  - 500-20000 PSIG *(34.47 - 1378.95 bar)*
- **FLOW (Cv):** 0.04
- **OPERATING TEMPERATURE:**
  - -15°F/-26°C to 165°F/74°C (BUNA-N)
  - -4°F/-20°C to 165°F/74°C (VITON®)
  - -65°F/-54°C to 165°F/74°C (EPDM)

  ***lower temperature compounds available upon request*

MATERIALS OF CONSTRUCTION

- **BODY** :
  - 17-4 Stainless Steel
- **BONNET**:
  - 17-4 Stainless Steel
- **WETTED PARTS, OTHER**:
  - 316 Stainless Steel
  - 17-4 Stainless Steel
- **O-RINGS:**
  - Buna-N
  - Aflas®
  - Viton®
  - EPDM
  - Kalrez® *(Contact factory for pricing)*
- **BACK-UP RINGS**: PCTFE & PEEK
- **VALVES**:
  - 17-4 Stainless Steel, Hardened
- **VALVE SEAT**:
  - Vespel®

PORTING

- **INLET PORTING**:
  - 1/4" Medium pressure, High Pressure
  - 3/8" Medium pressure, High Pressure
- **OUTLET PORTING**:
  - 1/4" Medium pressure, High Pressure
  - 3/8" Medium pressure, High Pressure
- **VENT PORT**:
  - 1/4" inlet/outlet type
- **OPTIONAL GAUGE PORT**:
  - 1/4" FNPT *(standard)*

OPTIONAL ITEMS

- Private label
- Panel mounting nuts
- Panel mounting bracket: *P/N: 30-10500 (2.53 in panel hole)*
- Tamper resistant acorn nut
- Bottom mount

PANEL NUT STYLE BODY

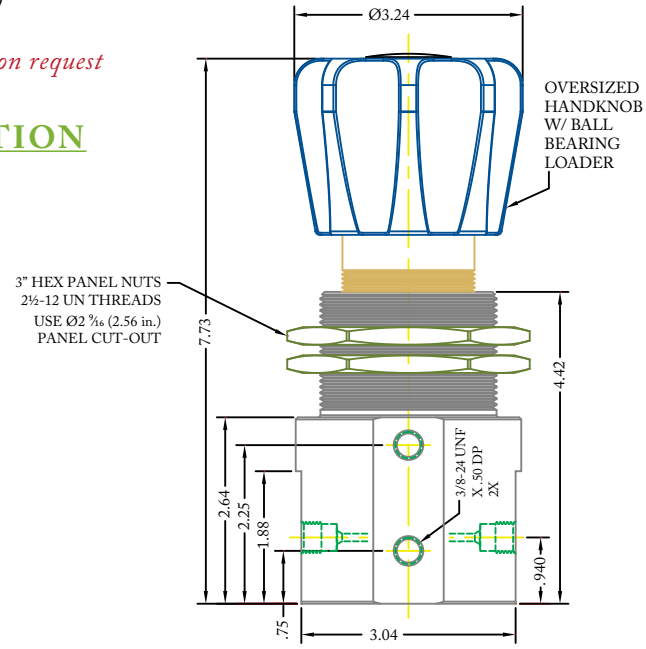

MOUNTING BRACKET STYLE BODY

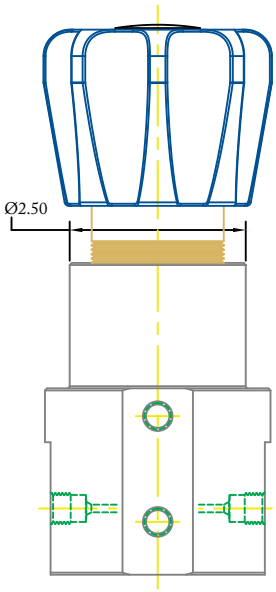

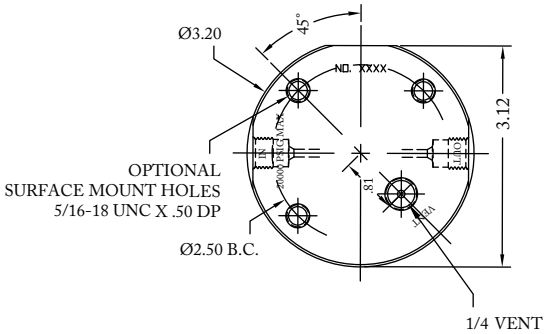

(Part number shown above: 30-10215G)

Kalrez® Vespel® & Viton® are registered trademarks of E.I.duPont de Nemours and Company
AFLAS® is a registered trademark of the Asahi Glass Co., Ltd.

HIGH PRESSURE
20000 PSIG
Pressure Reducing Regulators

3025 SERIES

PART #	1 2	-	3	4	5	6	7	-	8 9	-	MODS
30-10215G		-						-		-	

1 2	BODY STYLE
MB	Mounting bracket style body
PN	Panel nut style body *(panel nuts included)*

3	OUTLET PRESSURE
3	25 - 3000 psig *(1.72 - 206.84 bar)*
6	50 - 6000 psig *(3.45 - 413.69 bar)*
7	100 - 10000 psig *(6.89 - 689.48 bar)*
8	300 - 15000 psig *(20.68 - 1034.21 bar)*
9	500 - 20000 psig *(34.47 - 1378.95 bar)*

4	FLOW (Cv)
0	Cv: 0.04

5	PORTING CONFIGURATION
B	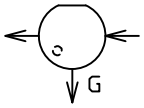
S	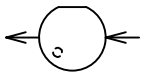

6	PORT SIZE
4	1/4”
6	3/8”

Vent port: 1/4” inlet/outlet port type
Gauge port: 1/4” FNPT standard

7	PORT TYPE *(IN/OUT/VENT)*
4	Medium pressure
5	High pressure

8 9	O-RING MATERIAL
00	BUNA-N
01	AFLAS®
02	VITON®
05	EPDM
11	KALREZ® *(Contact factory for pricing)*

MODIFICATIONS	
Blank	None
SM	Surface mount

20000 PSIG MAX INLET (stainless steel)
The end user is responsible to ensure adequate fittings are used to connect regulator to plumbing.

Kalrez® & Viton® are registered trademarks of E.I.duPont de Nemours and Company
AFLAS® is a registered trademark of the Asahi Glass Co., Ltd.

Contact factory for material certifications. Fees may apply.

AIR LOADED HIGH PRESSURE, 20K

Pressure Reducing Regulators

3025AL SERIES

PREMIER INDUSTRIES

1590 99th Ln NE,
Minneapolis, MN 55449
763-786-4020

MADE IN THE USA

Minneapolis, MN

DESCRIPTION

Premier 3025AL Series air loaded, pneumatic, high pressure, pressure reducing regulators are piston sensed, single stage, pressure reducing regulators rated for inlet and outlet pressures up to 20000 PSIG *(1378.95 bar)*, and Cv 0.043. Captured venting standard.

FEATURES

- Rated for pressures up to 20000 PSIG *(1378.95 bar)*
- Compatible with electro pneumatic controllers
- Flow capacity (Cv): 0.043
- Captured venting
- Very competitive pricing
- Machined bar stock body, bonnet and piston eliminates porosity found in castings

The Premier 3025AL Series pressure reducing regulator's design is remarkably flexible.
Contact Premier Industries for a custom 3025AL Series regulator to meet your exact needs.

3025AL SERIES

AIR LOADED HIGH PRESSURE, 20K

Pressure Reducing Regulators

SPECIFICATIONS

- **MAXIMUM INLET PRESSURE:** 20000 PSIG *(1378.95 bar)*
- **MAXIMUM LOAD PRESSURE:** 100 PSIG *(6.89 bar)*
- **CONTROL PRESSURE RANGE:**
  - 25-3000 PSIG *(1.72-206.84 bar)*
    Diameter: 0.656"
    Area: 0.338 in²
    *Ratio: 37/1 ***
  - 50-6000 PSIG *(3.45 - 413.69 bar)*
    Diameter: 0.462"
    Area: 0.1676 in²
    *Ratio: 75/1 ***
  - 100-10000 PSIG *(6.89 - 689.5 bar)*
    Diameter: 0.362"
    Area: 0.1029 in²
    *Ratio: 122/1 ***
  - 300-15000 PSIG *(20.68 - 1034.21 bar)*
    Diameter: 0.313"
    Area: 0.0769 in²
    *Ratio: 163/1 ***
  - 500-20000 PSIG *(34.47 - 1378.95 bar)*
    Diameter: 0.25"
    Area: 0.0491 in²
    *Ratio: 256/1 ***

*** 4.0" diameter diaphragm*
Diaphragm area: 12.5664 in²

- **FLOW (Cv):** 0.043
- **VENT VALVE (Cv):** 0.043

MATERIALS OF CONSTRUCTION

- **WETTED PARTS**: 316 Stainless Steel, 17-4 Stainless Steel
- **VALVES**:
  - 17-4 Stainless Steel, Hardened
- **HOUSING, AIR ACTUATOR**:
  - 6061-T6 Aluminum, Clear Anodized
- **DIAPHRAGM, AIR ACTUATOR**:
  - Neoprene, Nylon Fabric Reinforced
- **O-RINGS:**
  - BUNA-N
  - Aflas®
  - Viton®
  - EPDM
  - KALREZ® *(Contact factory for pricing)*
- **BACK-UP RINGS**: PCTFE
- **MAIN & VENT VALVE SEATS**: Vespel®

PORTING

- **INLET/ OUTLET/VENT PORTING**:
  - 1/4" Medium pressure, High Pressure
  - 3/8" Medium pressure, High Pressure
- **LOAD PORT**:
  - 1/4" FNPT *(100 psig max) see pg 3 for additonal load port options*
- **VENT PORT**:
  - 1/4" inlet/outlet port type

OPTIONAL ITEMS

- Gauge
- Panel mounting bracket: P/N: 30-10500 *(2.53 in panel hole)*
- Private label

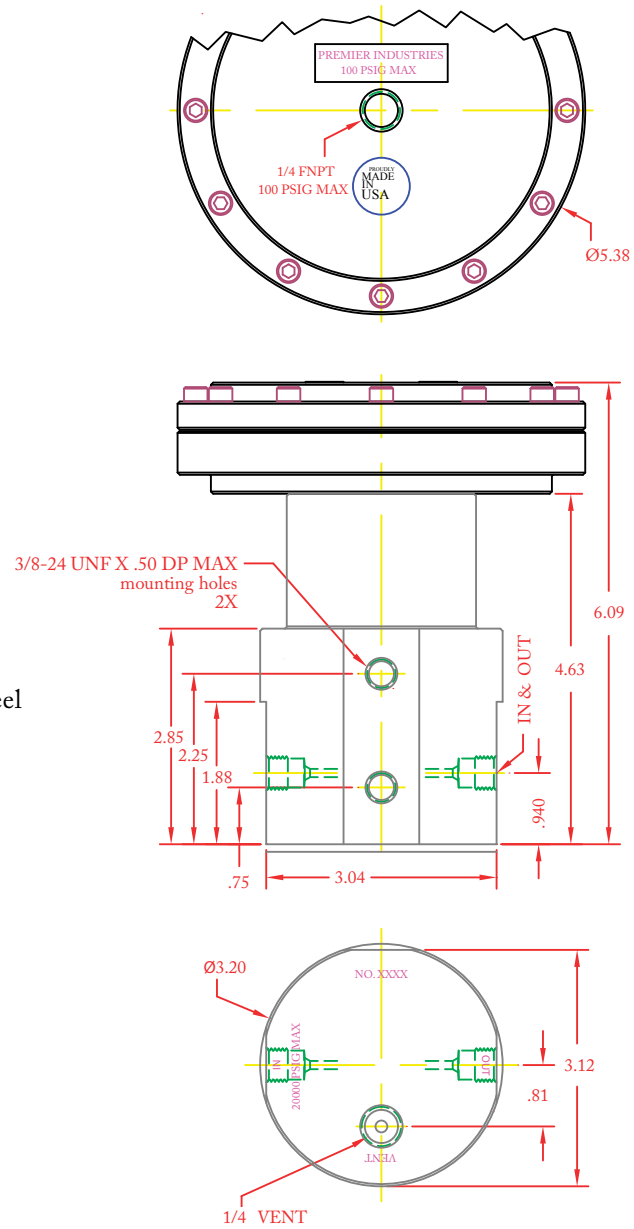

(Part number 30-10215ALG shown above)

Kalrez®, Vespel®, & Viton® are registered trademarks of E.I.duPont de Nemours and Company

AIR LOADED HIGH PRESSURE, 20K

Pressure Reducing Regulators

3025AL SERIES

PART #	-	1	2	3	4	-	5 6	-	MODS
30-10215ALG	-					-		-	

1	OUTLET PRESSURE
3	25 - 3000 psig *(1.72-206.84 bar)*
6	50 - 6000 psig *(3.45-413.69 bar)*
7	100 - 10000 psig *(6.89-689.48 bar)*
8	300 - 15000 psig *(20.68-1034.21 bar)*
9	500 - 20000 psig *(34.47-1378.95 bar)*
2	**PORTING CONFIG.**
B	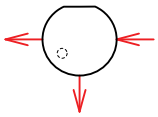
S	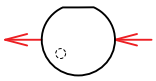

3	PORT SIZE *(IN/OUT)*
4	1/4”
6	3/8”

VENT PORT: 1/4” inlet/outlet port type

OPTIONAL GAUGE PORT: 1/4” FNPT (standard)

LOAD PORT: 1/4” FNPT standard, see mods for additional load port options.

4	PORT TYPE *(IN/OUT/VENT)*
4	Medium pressure
5	High pressure
5 6	**O-RINGS**
00	BUNA-N
01	AFLAS®
02	VITON®
05	EPDM
11	KALREZ® *(Contact factory for pricing)*

MODIFICATIONS	
BLANK	NONE
AS	1/4 AS5202 LOADER PORT
E	1/8 NPT LOADER PORT
J	1/4 SAE J1926 LOADER PORT
PTU	PORT TYPE UNIFORM
SM	SURFACE MOUNT

20000 PSIG MAX INLET (stainless steel)

The end user is responsible to ensure adequate fittings are used to connect regulator to plumbing.

Kalrez® & Viton® are registered trademarks of E.I.duPont de Nemours and Company

Aflas® is a registered trademark of the Asahi Glass Co., Ltd.

Contact factory for material certifications. Fees may apply.

HIGH PRESSURE LOADER PISTON SENSED

Pressure Reducing Regulators

3025HPL SERIES

PREMIER INDUSTRIES

1590 99th Ln NE,
Minneapolis, MN 55449
763-786-4020

MADE IN THE USA

Minneapolis, MN

DESCRIPTION

Premier 3025HPL Series regulators are high pressure loaded, piston sensed, single stage, pressure reducing regulators, rated for inlet pressures up to 20000 psig *(1378.95 bar)*, loading pressure up to 1500 psig *(103.42 bar)* and Cv 0.04 *(in full open condition)*. Available with outlet:loader ratios of 5:1, and 13:1. Captured venting standard. With over 4 times the sensing area of the 3025 Series regulator, the 3025HPL Series allows precise control in applications where high pressure loading supplies are available.

FEATURES

- Rated for inlet pressures up to 20000 PSIG *(1378.95 bar)*
- Max loading pressure: 1500 psig *(103.42 bar)*
- Load ratios: 5:1, 13:1 *(outlet:loader ratio)*
- Flow capacity (Cv): 0.04 *(in full open condition)*
- Captured venting
- Machined bar stock body, bonnet and piston eliminates porosity found in castings

The Premier 3025HPL Series pressure reducing regulator's design is remarkably flexible.
Contact Premier Industries for a custom 3025HPL Series regulator to meet your exact needs.

3025HPL SERIES

HIGH PRESSURE LOADER PISTON SENSED

Pressure Reducing Regulators

SPECIFICATIONS

- **MAXIMUM INLET PRESSURE:** 20000 PSIG *(1378.95 bar)*
- **MAXIMUM LOADING PRESSURE:** 1500 PSIG *(103.42 bar)*
- **OUTLET:LOADER RATIO:**
  - 5:1 (~6000:1200 PSI, ~7500:1500 PSIG)
  - 13:1 (~15000:1200 PSI, ~19000:1500 PSIG)
- **FLOW (Cv):** 0.04 *(in full open condition)*
- **VENT VALVE (Cv):** 0.04 *(in full open condition)*
- **TEMPERATURE RATING (BY O-RING MATERIAL):**
  - -15°F/-26°C to 165°F/74°C (BUNA-N)
  - -4°F/-20°C to 165°F/74°C (VITON®)
  - -65°F/-54°C to 165°F/74°C (EPDM)

  ***lower temperature compounds available upon request*

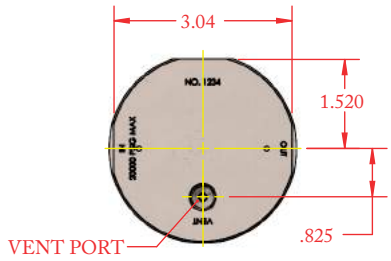

TOP VIEW

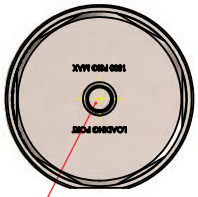

MATERIALS OF CONSTRUCTION

PROCESS WETTED MATERIALS:

- **BODY AND SENSOR COMPONENTS**: 17-4 Stainless Steel
- **MAIN VALVE**:
  - 316 Stainless Steel and 17-4 Stainless Steel
- **MAIN VALVE/VENT SEAT**:
  - Vespel®
- **O-RINGS:**
  - BUNA-N
  - Viton-A®
  - EPDM

LOADER WETTED MATERIALS:

- **CAP AND LOADER COMPONENTS (WETTED):**
  - 17-4 Stainless Steel

NON-WETTED MATERIALS:

- **COUPLER**:
  - 17-4 Stainless Steel
- **BEARING BALL AND LOAD BEARING DISC:**
  - High strength tool steel
- **WAVE SPRING:** 17-4 Stainless steel

PORTING

- **PROCESS PORTS**
  - 1/4" Medium pressure
- **LOAD/VENT PORTS**
  - AS5202 SIZE-04

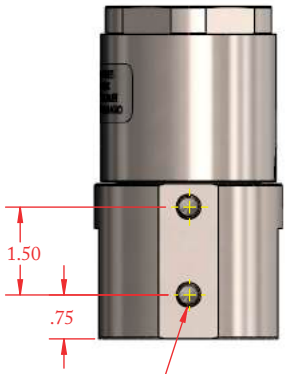

(Part number 30-10614 shown above)

OPTIONAL ITEMS

- Gauge
- Private label

Vespel®, & Viton-A® are registered trademarks of E.I.duPont de Nemours and Company

HIGH PRESSURE LOADER PISTON SENSED

Pressure Reducing Regulators

3025HPL SERIES

PART #	-	1	2	-	3	4	-	5	6
30-10614	-			-			-		

1	OUTLET:LOADER RATIO
1	5:1 (~6000:1200 PSI, ~7500:1500 PSIG)
2	13:1 (~15000:1200 PSI, ~19000:1500 PSIG)
2	**PORTING CONFIGURATION**
B	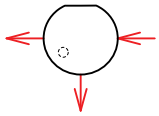
S	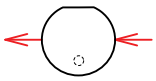
3	**PROCESS PORTS**
1	Medium pressure, 1/4”
4	**LOAD/VENT PORTS**
1	AS5202 SIZE-04

5	O-RING MATERIAL
1	Buna-n
2	Viton-A®
3	EPDM
6	**PROCESS WETTED LUBRICANT**
1	KRYTOX GPL206
2	KRYTOX 240AC
3	KRYTOX 240AZ

20000 PSIG MAX INLET

The end user is responsible to ensure properly rated equipment, plumbing, and fittings are used

Viton® is a registered trademark of E.I.duPont de Nemours and Company

Contact factory for material certifications. Fees may apply.

HIGH SENSITIVITY HIGH PRESSURE

Pressure Reducing Regulators

3400 SERIES

PREMIER INDUSTRIES

1590 99th Ln NE,
Minneapolis, MN 55449
763-786-4020

MADE IN THE USA

Minneapolis, MN

DESCRIPTION

Premier 3400 Series high pressure, diaphragm sensed, pressure reducing regulators offer high sensitivity with precise outlet pressure control. These precision, diaphragm sensed, pressure reducing regulators are rated for inlet pressures up to 6000 psig (414 bar), outlet pressures up to 500 psig (34.5 bar) and Cv 0.2. Premier 3400 Series regulators are offered in both venting and non-venting designs with a variety of materials, and porting options.

FEATURES

- Great sensitivity
- Large elastomeric diaphragm
- Optional panel mounting bracket
- Self venting and non-venting designs
- 300 series stainless steel filter extends the life of the seat
- Cv 0.2

The Premier 3400 Series pressure reducing regulator's design is remarkably flexible. Contact Premier Industries for a custom 3400 Series regulator to meet your exact needs.

3400 SERIES

HIGH SENSITIVITY HIGH PRESSURE

Pressure Reducing Regulators

SPECIFICATIONS

- **MAXIMUM INLET PRESSURE:** 6000 PSIG *(414 bar)*
- **CONTROL PRESSURE RANGE:**
  - 0-10 PSIG *(0 - 0.69 bar)*
  - 0-25 PSIG *(0 - 1.72 bar)*
  - 0-50 PSIG *(0 - 3.45 bar)*
  - 0-100 PSIG *(0 - 6.89 bar)*
  - 0-250 PSIG *(0 - 17.24 bar)*
  - 0-500 PSIG *(0 - 34.47 bar)*
- **FLOW (Cv):** 0.2
- **OPERATING TEMPERATURE:**
  - -40˚F to 165˚F / -40˚C to 74˚C

MATERIALS OF CONSTRUCTION

- **BODY & BONNET OPTIONS:**
  - 316 Stainless Steel
  - 6061-T6 Aluminum, Clear Anodize
  - SAE 360 Brass, Bright Dip
- **DIAPHRAGM OPTIONS:**
  - Buna-N
  - Neoprene
- **MAIN VALVE SEAT:**
  - PCTFE
- **VENT VALVE SEAT:**
  - PCTFE
- **O-RINGS:**
  - PTFE
- **FILTER:**
  - 15 or 40 micron, 300 Series stainless steel
- **REMAINING PARTS:**
  - 300 Series Stainless Steel

PORTING

- **INLET & OUTLET OPTIONS:**
  - 1/4" FNPT, SAE J1926, SAE AS5202*
  - 3/8" FNPT, SAE J1926, SAE AS5202*
  - 1/2" FNPT

OPTIONAL ITEMS

- Panel mounting bracket: P/N: 30-10059 *(Ø2.15 panel hole)*
- Gauges
- Private labeling

NON VENTING

SELF VENTING

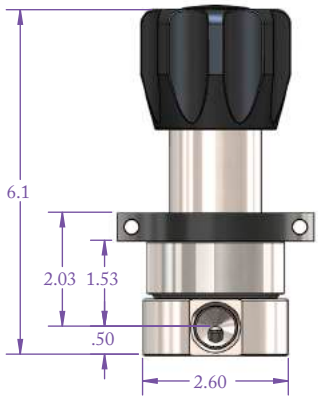

(Part number shown above: 30-10435)

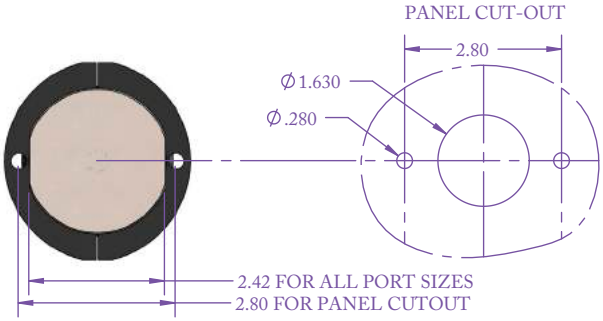

**SAE AS5202 supersedes MS33649*

Contact factory for material certifications. Fees may apply.

HIGH SENSITIVITY HIGH PRESSURE

Pressure Reducing Regulators

3400 SERIES

PART #	-	1	2	3	4	-	5	6	7	8
30-10435	-					-				

1	PORT SIZE
1	1/4" NPT
2	3/8" NPT
3	1/2" NPT
4	1/4" SAE J1926
5	3/8" SAE J1926
6	1/4" SAE AS5202*
7	3/8" SAE AS5202*
2	**Cv RATING**
1	0.2
3	**VENTING**
1	Self venting
2	non venting
4	**BODY/BONNET/ RETAINER MATERIALS**
1	SAE 360 Brass
2	316 Stainless Steel
3	6061-T6 Aluminum

5	FILTER
1	15 micron
2	40 micron
6	**DIAPHRAGM MATERIAL**
1	Buna-n
2	Neoprene
7	**OUTLET PRESSURE**
1	500 psig
2	250 psig
3	150 psig
4	50 psig
8	**MOUNTING BRACKET**
1	No bracket
2	Aluminum mounting bracket
3	Stainless steel mounting bracket

**SAE AS5202 supersedes MS33649*

6000 PSIG MAX INLET
The end user is responsible to ensure adequate fittings are used to connect regulator to plumbing.

Kalrez® & Viton® are registered trademarks of E.I.duPont de Nemours and Company.

Contact factory for material certifications. Fees may apply.

MINIATURE PNEUMATIC HIGH PRESSURE

Pressure Reducing Regulators

3500 SERIES

PREMIER INDUSTRIES

1590 99th Ln NE,
Minneapolis, MN 55449
763-786-4020

MADE IN THE USA

Minneapolis, MN

DESCRIPTION

Premier 3500 Series pressure reducing regulators are your affordable and compact solution for high pressure pneumatic applications. These rugged, piston sensed regulators are rated for 6000 PSIG *(413.69 bar)* with a wide range of field adjustable delivery pressure ranges, up to 6000 PSIG *(413.69 bar)* and Cv: 0.06 or 0.2. With a variety of construction material options, porting configurations, hand-knob styles, and mounting options, you can be confident the Premier 3500 Series pressure reducing regulator will integrate seamlessly into your pneumatic application.

FEATURES

- Piston sensed
- Main valve cartridge with 15 micron, 316 stainless steel filter
- 3 knob styles, basic, fluted, and tee handle
- Machined bar stock body and piston eliminates porosity found in castings
- Rear mounting holes and threaded bonnet standard, optional panel mounting nuts available
- Two, three, or four ¼" NPTF ports standard
- Non-venting
- Field adjustable outlet pressure ranges
- Minimal soft goods
- Compact & economically priced
- Optional tamper proof acorn nut.

The Premier 3500 Series pressure reducing regulator's design is remarkably flexible. Contact Premier Industries for a custom 3500 Series regulator to meet your exact needs.

3500 SERIES

MINIATURE PNEUMATIC HIGH PRESSURE

Pressure Reducing Regulators

SPECIFICATIONS

- **MAXIMUM INLET PRESSURE:** 6000 PSIG *(413.69*
- **CONTROL PRESSURE RANGES:**
  - 0-25 PSIG *(0 - 1.72 bar)*
  - 0-80 PSIG *(0 - 5.52 bar)*
  - 0-140 PSIG *(0 - 9.65 bar)*
  - 0-220 PSIG *(0 - 15.17 bar)*
  - 5-700 PSIG *(0.34 - 48.26 bar)*
  - 5-1200 PSIG *(0.34 - 82.73 bar)*
  - 5-1800 PSIG *(0.34 - 124.12 bar)*
  - 5-2500 PSIG *(0.34 - 172.37 bar)*
  - 10-6000 PSIG *(0.69 - 413.69 bar)*
- **Cv:** 0.06 or 0.2
- **DESIGN PROOF PRESSURE:** 150% maximum rated

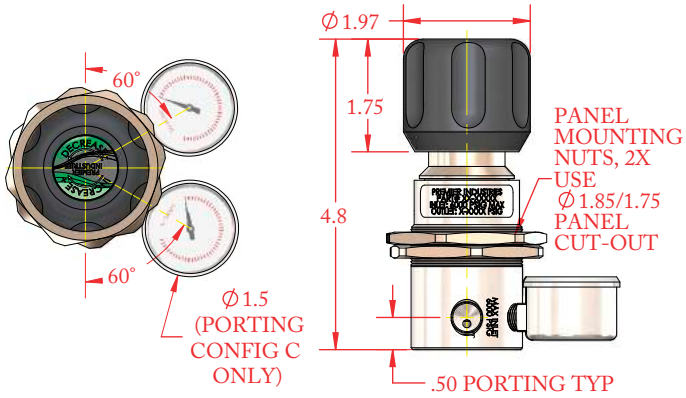

(P/N: 50-12282-2CXXXX222 w/ fluted hand knob shown above)

MATERIALS OF CONSTRUCTION

- **BODY**:
  - 6061-T6 Aluminum, Nickel Plated *(standard)*
  - 303 Stainless Steel
  - 316 Stainless Steel
  - SAE 360 Brass/Nickel Plated
  - Monel®
- **VALVE STEM**: 17-4 Stainless Steel
- **WETTED PARTS**:
  - 316 Stainless Steel *(with 316 stainless steel body option)*
  - 300 Series Stainless Steel / 17-4 Stainless Steel *(with all other body options)*
- **SEALS**:
  - Low-temperature nitrile *(standard)*
  - Nitrile
  - Viton®
  - EPDM
  - Neoprene
- **VALVE SEAT**:
  - PEEK® *(standard)*
  - PCTFE
  - Vespel®
- **MAIN VALVE FILTER**:
  - 15 micron sintered 316 stainless steel

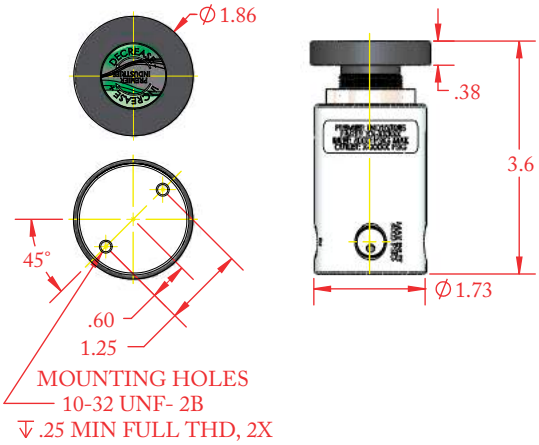

(P/N: 50-12282-1BXXXX110 w/ basic hand knob shown above)

PORTING

- **STANDARD INLETS**: 1/4" FNPT
- **STANDARD OUTLETS**: 1/4" FNPT
- **PORT OPTIONS**:
  - Two, three, or four port versions available

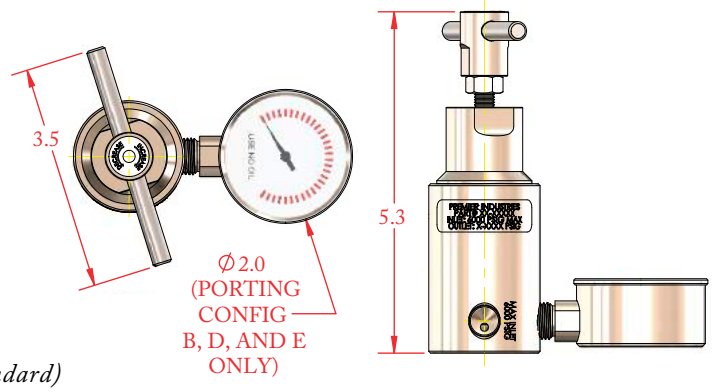

(P/N: 50-12282-4DXXXX312 w/ T-Handle shown above)

OPTIONS

- Gauges (plug): *stainless steel for both stainless body options, no gauges for monel option/monel plug chrome plated brass for all other options*
- Basic hand knob, fluted hand knob, tee handle, or acorn nut
- Panel mounting nuts *(threaded bonnet and mounting holes standard)*
- CGA fittings
- Private label
- Contact factory for custom materials of construction *(monel®, hastelloy® etc.)*

PEEK is a registered trademark of Victrex PLC. Hasetelloy is a registered trademark of Haynes International, Inc.
Vespel and Viton are registered trademarks of E.I.duPont de Nemours and Company
Monel is a registered trademark of Special Metals Corporation.

MINIATURE PNEUMATIC HIGH PRESSURE

Pressure Reducing Regulators

3500 SERIES

PART #	-	1	2	-	3	4	-	5	6	-	7	8	9	-	MODS
50-12282	-			-			-			-				-	

1	BODY MATERIAL *& FINISH*
1	6061-T6 Aluminum *Nickel Plated*
2	303 Stainless Steel *Clean per spec #515*
3	316 Stainless Steel *Clean per spec #515*
4	SAE 360 Brass *Nickel Plated*
5	Monel 400®

2	PORTING CONFIGURATIONS
A	
B	
C*	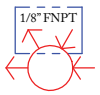
D	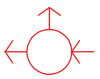
E	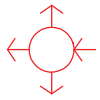
K	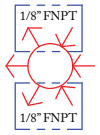
L	

3	OUTLET PRESSURE
0	0-25 PSIG *(0 - 1.72 bar)*
1	0-80 PSIG *(0 - 5.52 bar)*
2	0-140 PSIG *(0 - 9.65 bar)*
3	0-220 PSIG *(0 - 15.17 bar)*
4	5-700 PSIG *(0.34 - 48.26 bar)*
5	5-1200 PSIG *(0.34 - 82.73 bar)*
6	5-1800 PSIG *(0.34 - 124.12 bar)*
7	5-2500 PSIG *(0.34 - 172.37 bar)*
8	10-6000 PSIG *(0.69 - 413.69 bar)*

4	MAIN VALVE (Cv)
1	0.06 max
2	0.20 max

5	O-RING SEAL MATERIAL
1	Nitrile
2	Low-temp nitrile
3	Viton®
4	EPDM
5	Neoprene

6	SEAT MATERIAL
1	PCTFE
2	PEEK®
3	Vespel®

7	HAND KNOB
1	Basic knob
2	Fluted knob
3	Tee handle
4	None *** locked / tamper resistant*

8	MOUNTING
1	Mounting holes (no mounting nuts)
2	Panel mounting nuts & mounting holes

9	GAUGES
0	None
2	Include gauges *(port config. "A" not available with gauges)*

MODIFICATIONS	
BLANK	None
L	Orient gauges for left side process inlet ***(K porting only)***

PEEK is a registered trademark of Victrex PLC. Vespel and Viton are registered trademarks of E.I.duPont de Nemours & Company. Monel is a trademark of Specialty Metals Corporation

** All ports are 1/4" FNPT unless otherwise indicated on the porting configuratons.*

****TAMPER RESISTANT ACORN NUT**
THE END USER IS RESPONSIBLE TO SPECIFY A PRESET OUTLET PRESSURE. IF AN OUTLET PRESSURE IS NOT SPECIFIED, THE PRESSURE WILL BE LEFT UNSET. NEVER EXCEED THE MAXIMUM OUTLET PRESSURE SPECIFIED ON THE PART NUMBER.

Contact factory for material certifications. Fees may apply.

AIR LOADED HIGH PRESSURE, PNEUMATIC

Pressure Reducing Regulators

3500AL SERIES

PREMIER INDUSTRIES

1590 99th Ln NE,
Minneapolis, MN 55449
763-786-4020

(Non-venting 3500AL w/ bias spring shown above)

MADE IN THE USA

Minneapolis, MN

DESCRIPTION

Premier 3500AL Series air loaded, pressure reducing regulators are your affordable and compact solution for high pressure, pneumatic applications. These rugged, piston sensed regulators are rated for 6000 PSIG *(413.69 bar)* and Cv: 0.06 or 0.2. With three available load ratios, 1:2 , 1:3, and 1:4, and an optional bias spring, a vast range of outlet pressures can be controlled *(maximum outlet pressure of 3670 PSIG / 53.04 bar with a 4:1 ratio + bias spring)*. Premier 3500AL regulators feature captured venting to safely pipe away expelled media. With a variety of construction material options, load ratios, porting configurations, and mounting options, you can be confident the Premier 3500AL Series air loaded, pressure reducing regulator will integrate seamlessly into your pneumatic application.

FEATURES

- Compatible with electro-pneumatic controllers & manual pilot regulators
- 6000 PSIG / 413.69 bar max inlet
- Three load ratios: 1:2 , 1:3, and 1:4
- Captured venting standard
- Optional non-venting design with bias spring *(4X air load + 0-150 PSIG bias)*
- Cv 0.06 or 0.2
- Compact design
- Machined bar stock body and piston eliminates porosity found in castings
- Bottom mount *(standard)*
- Optional panel mounting
- Two or four port designs available

The Premier 3500AL Series pressure reducing regulator's design is remarkably flexible.
Contact Premier Industries for a custom 3500AL Series regulator to meet your exact needs.

3500AL SERIES

AIR LOADED HIGH PRESSURE, PNEUMATIC
Pressure Reducing Regulators

SPECIFICATIONS

- **MAX INLET PRESSURE:** 6000 PSIG *(413.69 bar)*
- **MAX LOADING PRESSURE:** 1000 PSIG *(68.95 bar)*
- **LOADER:OUTLET PRESSURE RATIO:**
  - 1:2**
  - 1:3**
  - 1:4**
  - 1:4 + 0-150 PSIG bias**

  *** Approximately 2 psig additional dome load per 100 psi inlet pressure to maintain outlet/loader ratio on Cv 0.2 design. Approximately 1.5 psig additional dome load per 100 psi inlet pressure to maintain outlet/loader ratio on Cv 0.06 design.*
- **Cv:** 0.06 or 0.2
- **LEAK RATE:** Bubble tight N_2

MATERIALS OF CONSTRUCTION

- **BODY & BONNET OPTIONS**:
  - 6061-T6 Aluminum, Clear Anodized *(standard)*
  - 303 Stainless Steel
  - 316 Stainless Steel
- **PISTON**:
  - 303 Stainless Steel
  - 316 Stainless Steel *(316 Stainless Steel body option)*
- **MAIN VALVE COMPONENTS**:
  - 300 Series Stainless Steel
- **MAIN VALVE SEAT**:
  - PEEK®
  - PCTFE
  - Vespel®
- **O-RING SEALS**:
  - Nitrile
  - Viton®
  - EPDM
  - Neoprene
- **PANEL MOUNTING NUTS (OPTIONAL)**:
  - 6061-T6 Aluminum (nickel plated)

PORTING

- **STANDARD INLETS**: 1/4" FNPT
- **STANDARD OUTLETS**: 1/4" FNPT
- **LOADING PORT**: 1/4" FNPT, *(1/8-27 FNPT w/ bias)*
- **VENT PORT**: 1/4" FNPT
- **GAUGE PORTS**: 1/8" FNPT

OPTIONS

- Gauges
- Private label
- Panel mounting nuts *(X2 required)*
  (Order Separately: P/N 50-11803)
- Optional non-venting design with bias spring
  (4X air load + 0-150 PSIG bias)
- For custom materials of construction
  (monel®, hastelloy® etc.) please contact factory.

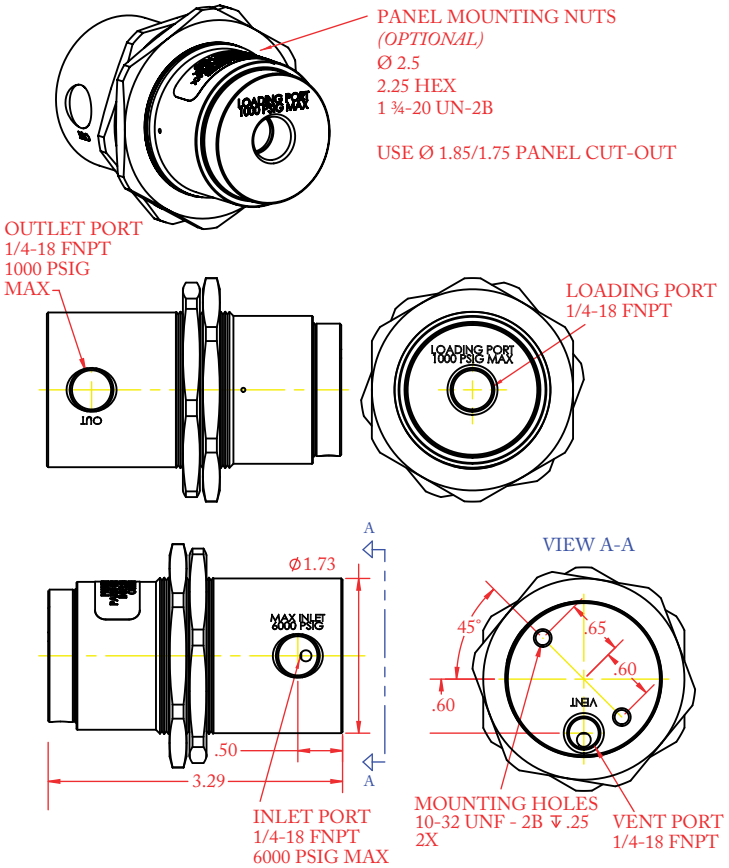

(P/N: 50-12306 shown above)

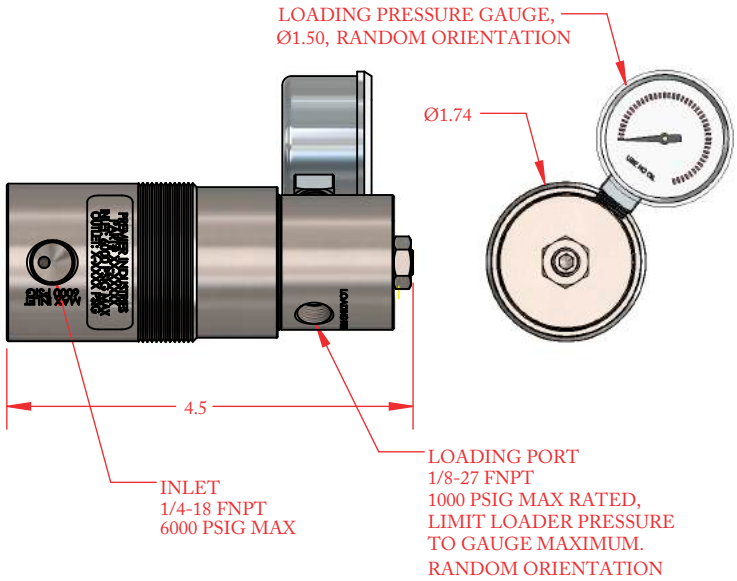

(P/N: 50-12398 non-venting design w/ bias spring shown above)

PEEK is a registered trademark of Victrex PLC. Hasetelloy is a registered trademark of Haynes International, Inc.
Vespel and Viton are registered trademarks of E.I.duPont de Nemours and Company. Monel is a registered trademark of Special Metals Corporation.

AIR LOADED HIGH PRESSURE, PNEUMATIC

Pressure Reducing Regulators

3500AL SERIES

SERIES	-	1	2	-	3	4	5	-	6	7
50-12306	-			-				-		

1	BODY MATERIALS *& FINISH*
1	6061-T6 Aluminum *Clear Anodize*
2	303 Stainless Steel *Clean per spec #515*
3	316 Stainless Steel *Clean per spec #515*

2	PORTING
1	2 port
2	4 port

3	O-RING MATERIAL
1	Nitrile
2	Viton®
3	EPDM
4	Neoprene

4	SEAT MATERIAL
1	PEEK®
2	PCTFE
3	Vespel®

5	FLOW (Cv)
1	0.06
2	0.2

6	GAUGES
1	None
2	Include gauges (4 port only)

7	LOADER RATIO
2	1:2** *(2000 psig max outlet)*
3	1:3** *(3000 psig max outlet)*
4	1:4** *(4000 psig max outlet)*

*** Approximately 2 psig additional dome load per 100 psi inlet pressure to maintain outlet/loader ratio on Cv 0.2 design. Approximately 1.5 psig additional dome load per 100 psi inlet pressure to maintain outlet/loader ratio on Cv 0.06 design.*

PEEK® is a registered trademark of Victrex PLC

Vespel® and Viton® are registered trademarks of E.I.duPond De Nemours and Company

For custom materials of construction *(monel®, hastelloy® etc.)* please contact factory.

Contact factory for material certifications. Fees may apply.

DOME LOADED HIGH PRESSURE, PNEUMATIC

Pressure Reducing Regulators

3500DL SERIES

PREMIER INDUSTRIES

1590 99th Ln NE,
Minneapolis, MN 55449
763-786-4020

MADE IN THE USA

Minneapolis, MN

DESCRIPTION

Premier 3500DL Series dome loaded, pressure reducing regulators are your affordable and compact solution for high pressure pneumatic applications. These rugged, piston sensed regulators are rated for 6000 PSIG *(413.69 bar)*, featuring a 1:1 loader with a maximum outlet pressure of 1000 PSIG *(68.95 bar)* and Cv: 0.06 or 0.2. Premier 3500DL regulators feature captured venting to safely pipe away expelled media. With a variety of construction material options, porting configurations, and mounting options, you can be confident the Premier 3500DL Series dome loaded, pressure reducing regulator will integrate seamlessly into your pneumatic application.

FEATURES

- Compatible with electro-pneumatic controllers
- Piston Sensed
- Reduced particle contamination with 15 micron valve cartridge filter
- Captured venting
- Lightweight, compact design
- Machined bar stock body and piston eliminates porosity found in castings
- Bottom mount *(standard)*
- Optional threaded body & panel mounting nuts
- Two or four port designs available
- 1:1 loader with max outlet pressure of 1000 PSIG *(68.9 bar)*

The Premier 3500DL Series pressure reducing regulator's design is remarkably flexible.
Contact Premier Industries for a custom 3500DL Series regulator to meet your exact needs.

3500DL SERIES

DOME LOADED HIGH PRESSURE, PNEUMATIC

Pressure Reducing Regulators

SPECIFICATIONS

- **MAXIMUM INLET PRESSURE:**
  - 6000 PSIG *(413.69 bar)*
- **OUTLET PRESSURE:**
  - 1000 PSIG *(68.95 bar)*
- **MAX DOME LOAD:** 1000 PSIG (68.95 bar)
- **LOAD RATIO:** 1:1**

** ***Cv 0.06:*** *an additional 10-50 psi (0.69- 3.45 bar) dome load is required to maintain a 1:1 outlet pressure to dome load ratio.*

Cv 0.2: *an additional 10-70 psi (0.69- 3.45 bar) dome load is required to maintain a 1:1 outlet pressure to dome load ratio.*

- **Cv:** 0.06 or 0.2
- **LEAK RATE:** Bubble tight N_2

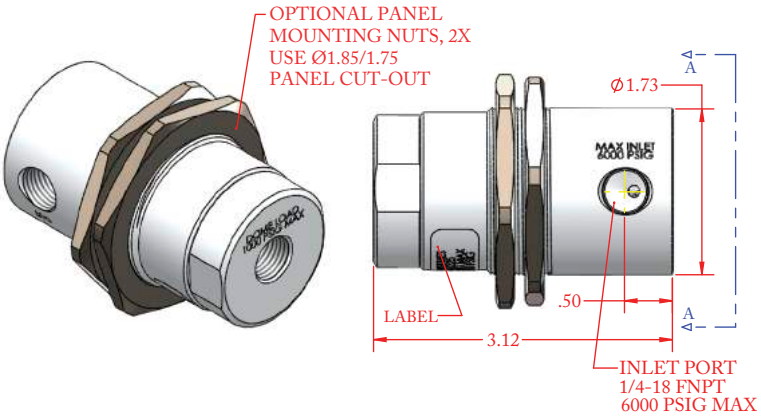

MATERIALS OF CONSTRUCTION

- **BODY**:
  - 6061-T6 Aluminum, Clear Anodized *(standard)*
  - 303 Stainless Steel
  - 316 Stainless Steel
- **BONNET**:
  - 6061-T6 Aluminum, Clear Anodized *(standard)*
  - 303 Stainless Steel
  - 316 Stainless Steel
- **PISTON**:
  - 303 Stainless Steel
  - 316 Stainless Steel *(316 stainless steel body option)*
- **MAIN VALVE COMPONENTS**:
  - 300 Series Stainless Steel
- **MAIN VALVE SEAT**: PEEK® *(standard)* *(other options available)*
- **O-RING SEALS**: Nitrile, PTFE *(standard)* *(other options available)*
- **PANEL MOUNTING NUTS (OPTIONAL)**:
  - 6061-T6 Aluminum (nickel plated)

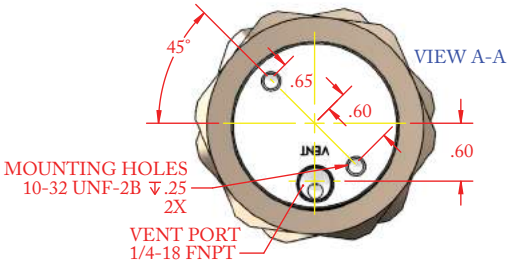

(P/N: 50-12251-11XX1 shown above)

PORTING

- **STANDARD INLETS**: 1/4" FNPT
- **STANDARD OUTLETS**: 1/4" FNPT
- **DOME PORT**: 1/4" FNPT
- **VENT PORT**: 1/4" FNPT
- **GAUGE PORTS**: 1/8" FNPT

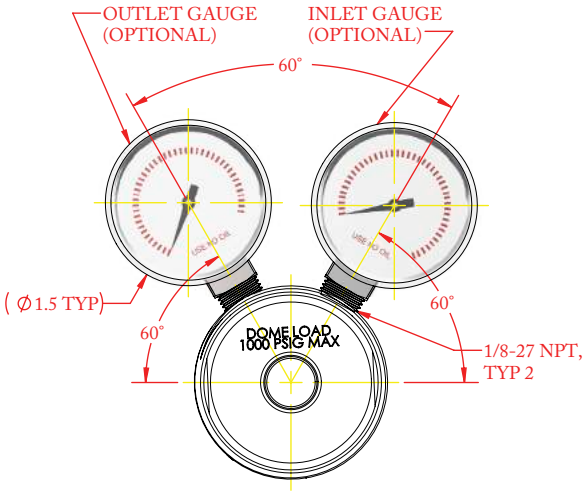

(P/N: 50-12251-12XX2 shown above)

OPTIONS

- Gauges
- Private label
- Panel mounting nuts *(X2 required)* *(Order Separately: P/N 50-11803)*
- For custom materials of construction *(monel®, hastelloy® etc.)* please contact factory.

PEEK is a registered trademark of Victrex PLC. Monel is a registered trademark of Special Metals Corporation. Hastelloy is a registered trademark of Haynes International, Inc.

DOME LOADED HIGH PRESSURE, PNEUMATIC

Pressure Reducing Regulators

3500DL SERIES

SERIES	-	1	2	-	3	4	-	5	6
50-12251	-			-			-		

1	BODY MATERIALS *& FINISH*
1	6061-T6 Aluminum *Clear Anodize*
2	303 Stainless Steel *Clean per spec #515*
3	316 Stainless Steel *Clean per spec #515*
2	**PORTING**
1	2 port
2	4 port
3	**O-RING MATERIAL**
1	Nitrile
2	Viton®
3	EPDM
4	Neoprene

4	SEAT MATERIAL
1	PEEK®
2	PCTFE
3	Vespel®
5	**FLOW (Cv)**
1	0.06
2	0.2
6	**GAUGES**
1	None
2	Include gauges (4 port only)

PEEK® is a registered trademark of Victrex PLC
Vespel® and Viton® are registered trademarks of E.I.duPond De Nemours and Company
For custom materials of construction (monel®, hastelloy® etc.) please contact factory.
Contact factory for material certifications. Fees may apply.

MINIATURE, PNEUMATIC HIGH PRESSURE, 10K

Pressure Reducing Regulators

3560 SERIES

PREMIER INDUSTRIES

1590 99th Ln NE,
Minneapolis, MN 55449
763-786-4020

MADE IN THE USA

Minneapolis, MN

DESCRIPTION

Premier 3560 Series pressure reducing regulators are your affordable and compact solution for high pressure pneumatic applications. These rugged, piston sensed regulators are designed for inlet and outlet pressures up to 10000 PSIG *(689.48 bar)* and Cv 0.06 or 0.20. Pipe away potentially toxic or hazardous media with the tamper resistant captured venting. Optional panel mounting and bottom mounting available.

FEATURES

- 10000 psig *(689.48 bar)* max
- Captured-venting
- Cv 0.06, or 0.20
- Machined bar stock body and piston eliminates porosity found in castings
- Rear mounting holes standard with optional panel mounting nuts
- Compact and economically priced

The Premier 3560 Series pressure reducing regulator's design is remarkably flexible. Contact Premier Industries for a custom 3560 Series regulator to meet your exact needs.

3560 SERIES

MINIATURE, PNEUMATIC HIGH PRESSURE, 10K

Pressure Reducing Regulators

SPECIFICATIONS

- **MAXIMUM INLET PRESSURE:**
  - 10000 PSIG *(689.48 bar)*
- **CONTROL PRESSURE RANGES:**
  - 0-250 PSIG *(0-17.24 bar)*
  - 5-500 PSIG *(0.34-34.47 bar)*
  - 5-800 PSIG *(0.34-55.16 bar)*
  - 10-1500 PSIG *(0.69-103.42 bar)*
  - 15-2500 PSIG *(1.03-172.37 bar)*
  - 25-4000 PSIG *(1.72-275.79 bar)*
  - 50-6000 PSIG *(3.45-413.69 bar)*
  - 100-10000 PSIG *(6.89-689.48 bar)*
- **Cv:** 0.06, 0.20

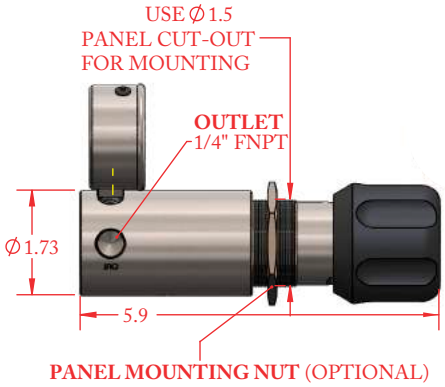

MATERIALS OF CONSTRUCTION

- **BODY**:
  - 303 Stainless Steel
  - 316 Stainless Steel
  - 6061-T6 Aluminum, Nickel Plated *(6000 psig max)*
- **BONNET**:
  - 303 Stainless Steel *(Non-wetted)*
- **VALVE STEM**:
  - 17-4 Stainless Steel
- **OTHER WETTED PARTS**:
  - 316 Stainless Steel *(with 316 stainless steel body option)*
  - 300 Series Stainless Steel *(with all other body options)*
- **SENSOR PISTON & HOUSING**:
  - 17-4 Stainless Steel
- **SEALS**:
  - Buna-N
  - Viton®
  - EPDM
  - Low-temperature nitrile
- **MAIN VALVE & VENT VALVE SEAT OPTIONS**:
  - Vespel®
  - PEEK®
  - PCTFE *(aluminum body option only)*

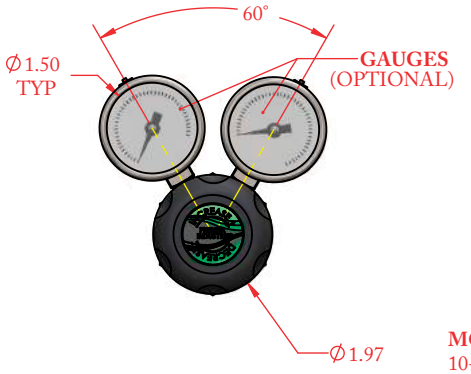

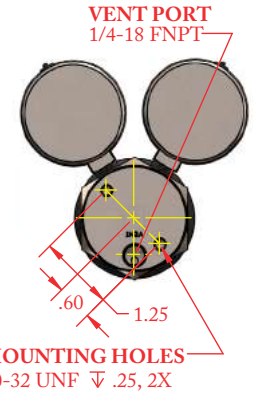

PORTING

- **STANDARD INLET**: 1/4" FNPT
- **STANDARD OUTLET**: 1/4" FNPT
- **GAUGE PORTS**: 1/8" FNPT, 2X
- **VENT PORT**: 1/4" FNPT

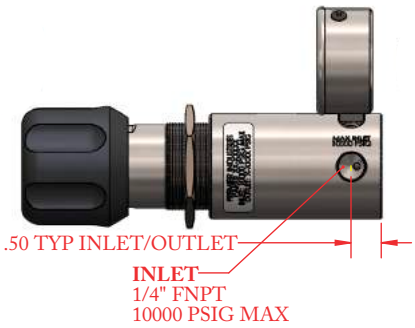

(P/N: 30-10466 shown above)

OPTIONAL ITEMS

- Gauges *(316 stainless steel wetted components, 304 stainless steel case, glycerine filled)*
- Panel mounting configuration
- Private label

Vespel® and Viton® are registered trademarks of E.I.duPont de Nemours and Company
PEEK® is a registered trademark of Victrex PLC

MINIATURE, PNEUMATIC HIGH PRESSURE, 10K

Pressure Reducing Regulators

3560 SERIES

PART #	1	-	2	3	4	-	5	6	7
30-10466		-				-			

1	VENT/MAIN VALVE SEAT MATERIAL
1	Vespel Sp-1®
2	PEEK®
3	PCTFE *(Aluminum body only)*

2	OUTLET PRESSURE
1	0-250 psig *(0-17.24 bar)*
2	5-500 psig *(0.34-34.47 bar)*
3	5-800 psig *(0.34-55.16 bar)*
4	10-1500 psig *(0.69-103.42 bar)*
5	15-2500 psig *(1.03-172.37 bar)*
6	25-4000 psig *(1.72-275.79)*
7	50-6000 psig *(3.45-413.69 bar)*
8	100-10000 psig *(6.89-689.48 bar)*

3	BODY MATERIAL & FINISH
1	303 Stainless Steel
2	316 Stainless Steel
3	6061-T6 Aluminum, Nickel plated *6000 psig max*

4	O-RING MATERIAL
1	BUNA-N
2	VITON®
3	EPDM
4	NITRILE, LO-TEMP

5	FLOW (Cv)
1	0.06
2	0.20

6	GAUGES/ PORTING
1	No gauges, 'S' porting
2	No gauges, 'C' porting
3	Include gauges, 'C' porting
4	No gauges, 'A' porting
5	Include gauges, 'A' porting

7	MOUNTING
1	Bottom mount only
2	Panel mounting & bottom mount

10000 PSIG MAX INLET

The end user is responsible to ensure adequate fittings are used to connect regulator to plumbing.

Vespel® & Viton® are registered trademarks of E.I.duPont de Nemours and Company. PEEK® is a registered trademark of Victrex PLC

Contact factory for material certifications. Fees may apply.

TWO STAGE HIGH SENSITIVITY

Pressure Reducing Regulators

4050 SERIES

PREMIER INDUSTRIES

1590 99th Ln NE,
Minneapolis, MN 55449
763-786-4020

MADE IN THE USA

Minneapolis, MN

DESCRIPTION

Premier 4050 Series regulators are two stage, high sensitivity, pressure reducing regulators, rated for inlet pressures up to 3000 psig *(206.8 bar)*, and a max flow of 15 SLPM. Premier 4050 Series regulators can be fitted with an optional, capturable relief valve.

FEATURES

- Max flow: 15 slpm
- Adjustable to within 0.2 inches H_2O / 0.007 psig of target pressure on the 0-2 psig control pressure config.
- Optional panel mounting nuts
- Machined bar stock body eliminates porosity found in castings

The Premier 4050 Series pressure reducing regulator's design is remarkably flexible. Contact Premier Industries for a custom 4050 Series regulator to meet your exact needs.

4050 SERIES

TWO STAGE HIGH SENSITIVITY

Pressure Reducing Regulators

SPECIFICATIONS

- **MAXIMUM INLET PRESSURE:** 3000 PSIG *(206.8 bar)*
- **OUTLET PRESSURE RANGES:**
  - 0-2 PSIG *(0 - 0.14 bar)*
  - 0-10 PSIG *(0 - 0.69 bar)*
  - 0-30 PSIG *(0 - 2.07 bar)*
- **MAX FLOW:** 15 SLPM (AIR)

MATERIALS OF CONSTRUCTION

- **WETTED MATERIALS:**
  - 6061-T6 Aluminum/Clear Anodize, SAE 360 Brass, and stainless steel
- **SEAL MATERIALS:**
  - Buna-N
  - Viton-A®
- **NON-WETTED MATERIALS:**
  - 6061-T6 Aluminum/Clear Anodize, spring steel, brass
- **PANEL MOUNTING NUTS (OPTIONAL):**
  - 6061-T6 Aluminum/Clear Anodize

PORTING

- **STANDARD INLET:**
  - 1/4-18 FNPT
  - *Contact factory for other options*
- **STANDARD OUTLET:**
  - 1/8-27 FNPT
  - *Contact factory for other options*

OPTIONS

- Gauges *(optional)*
- Private Label
- Capturable relief valve (1/4" MNPT connection)
- Panel mounting nuts (P/N: 50-11355)
- CGA adapter for cylinder connections

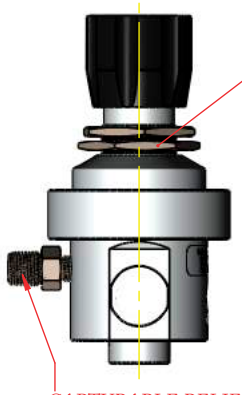

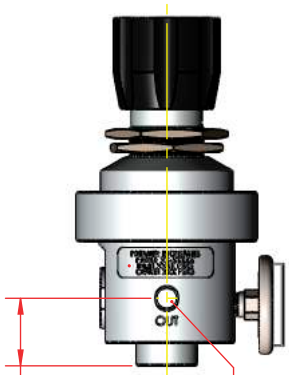

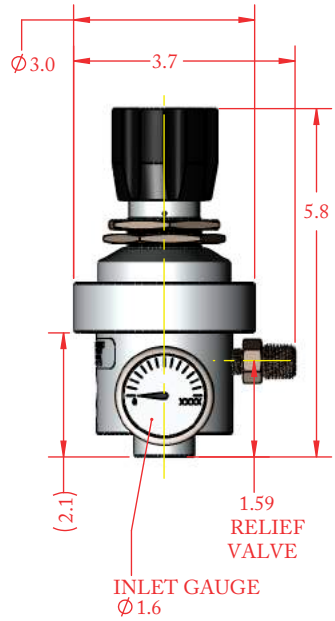

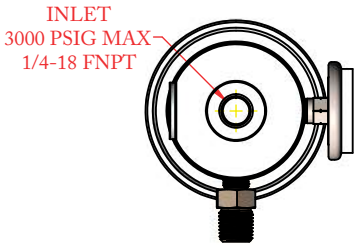

(Part number: 50-12805 shown with standard porting)

Viton-A® is a registered trademark of E.I.duPont de Nemours and Company

TWO STAGE HIGH SENSITIVITY

Pressure Reducing Regulators

4050 SERIES

PART #	-	1	2	-	3	4	-	5	6	-	7
50-12805	-			-			-			-	

1	**WETTED MATERIALS**
1	6061-T6 Aluminum/Clear Anodize, SAE 360 Brass, and stainless steel
2	**SEAL MATERIALS**
1	BUNA-N
2	VITON-A®
3	**GAUGES**
1	INLET GAUGE (3000 PSIG)
2	INLET GAUGE PORT PLUGGED
4	**RELIEF VALVE**
0	NO RELIEF VALVE
1	INCLUDE RELIEF VALVE

5	**INLET ADAPTER**
0	None (1/4-18 FNPT)
6	**OUTLET ADAPTER**
0	None (1/8-27 FNPT)
7	**OUTLET PRESSURE (RELIEF PRESSURE)**
1	0-2 PSIG (15 PSIG)
2	0-10 PSIG (15 PSIG)
3	0-30 PSIG (45 PSIG)

Viton-A® is a registered trademark of E.I.duPont de Nemours and Company

Contact factory for material certifications. Fees may apply.

MINIATURE TWO STAGE
Pressure Reducing Regulators

4300N SERIES

PREMIER INDUSTRIES

1590 99th Ln NE,
Minneapolis, MN 55449
763-786-4020

(part number 50-12070 shown above with optional C10 inlet adapter)

(part number 50-11422 shown above with integrated C10 inlet connection)

(part number 50-12705 shown above with tamper resistant acorn nut)

MADE IN THE USA
Minneapolis, MN

DESCRIPTION

Premier 4300N Series adjustable, miniature, two stage (1st stage piston, 2nd stage diaphragm) pressure reducing regulators, are designed for precise, low-flow gas delivery. Their compact, two stage design provides precise, stable delivery pressures even as the supply pressure decreases. Premier 4300N Series regulators control inlet pressures up to 3000 PSIG *(206.84 bar)* and have a flow capacity of Cv 0.04.

Premier 4300N Series regulators are available in a wide variety of materials and configurations, making them ideal for use in labs, industrial monitors, disposable / transportable gas cylinders, and for the regulation of a broad range of media.

FEATURES

- Precise, stable delivery pressure, even as the supply pressure decreases
- Low internal volume promotes quick gas flow stabilization and purging
- Models are available for both corrosive and non-corrosive service.
- Major components are available in numerous materials
- Machined bar stock body, interstage, bonnet and piston eliminates porosity found in castings
- Numerous porting configurations are available
- Integral inlet filter
- Compact size (1¼ in. diameter x 5 in. high)
- Extremely light weight
- Very competitive pricing

The Premier 4300N Series pressure reducing regulator's design is remarkably flexible.
Contact Premier Industries for a custom Premier 4300N Series regulator to meet your exact needs.

4300N SERIES

MINIATURE TWO STAGE
Pressure Reducing Regulators

SPECIFICATIONS

- **MAXIMUM INLET PRESSURE:** 3000 PSI *(206.84 bar)*
- **OUTLET PRESSURE RANGES:**
  - 0-10 PSIG *(0 - 0.69 bar)*
  - 0-50 PSIG *(0 - 3.45 bar)*
  - 0-100 PSIG *(0 - 6.89 bar)*
- **LEAK RATE:** Bubble Tight
- **WEIGHT:**
  - Approx. 9 oz. for Aluminum
  - Approx. 1.5 lbs for Brass and Stainless Steel
- **FLOW CAPACITY (**Cv): 0.04

MATERIALS OF CONSTRUCTION

- **BODY OPTIONS:**
  - 303 Stainless Steel
  - 6061-T6 Aluminum / Clear Anodized
- **BONNET:**
  - 6061-T6 Aluminum / Clear Anodized
  - Nickel Plated Aluminum
- **PISTON:**
  - SAE 360 Brass
  - 303 Stainless Steel
- **DIAPHRAGM:**
  - Neoprene *(standard)*
  - PTFE
- **VALVE SEATS:**
  - Neoprene *(Standard)*
  - PTFE
- **INLET FILTER:** 40 Micron Sintered 316 Stainless Steel

PORTING

- **STANDARD INLET PORTING:**
  - 1/4" FNPT *(standard)*
- **OPTIONAL INLET PORTING**
  - 1/8" FNPT
  - C-10 (5/8"-18 UNF) *(Integrated)*
  - All available CGA adapter connections
- **STANDARD OUTLET PORTING:**
  - 1/8" FNPT *(standard)*
- **OPTIONAL OUTLET ADAPTER CONNECTIONS:**
  - 1/8" Hose Barb
  - 3/16" Hose Barb
  - 1/4" Hose Barb

OPTIONS

- Inlet and/or Outlet Gauges
- Anodized Colors for Aluminum Bodies and Bonnets
- Acorn nut for preset outlet pressures: *P/N: 50-12705*
- Private Label
- Other elastomers available upon request

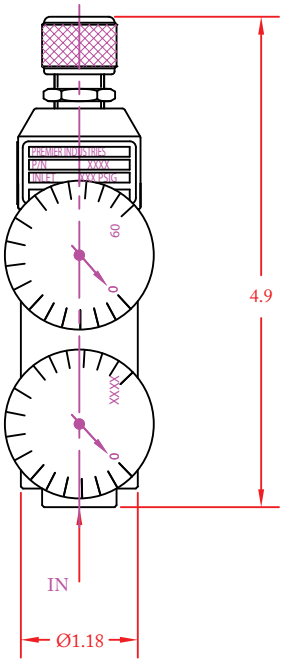

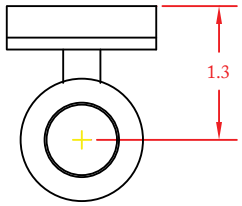

(part number 50-10790 shown above)

Viton® is a registered trademark of E.I.duPont de Nemours and Company
Contact factory for material certifications. Fees may apply.

MINIATURE TWO STAGE
Pressure Reducing Regulators

4300S SERIES

PREMIER INDUSTRIES

1590 99th Ln NE,
Minneapolis, MN 55449
763-786-4020

MADE IN THE USA
Minneapolis, MN

DESCRIPTION

Premier 4300S Series adjustable, miniature, two stage (1st stage piston, 2nd stage Elgiloy® diaphragm) pressure reducing regulators, are designed for high purity, low-flow gas delivery. Their compact, two stage design provides precise, stable delivery pressures even as the supply pressure decreases. Premier 4300S Series regulators are rated for inlet pressures up to 3000 PSIG *(206.84 bar)* and Cv 0.014.

Premier 4300S Series regulators are available in a wide variety of materials and configurations, making them ideal for use in labs, industrial monitors, disposable / transportable gas cylinders, and for the regulation of a broad range of media.

FEATURES

- Elgiloy® diaphragm reduces gas contamination and diffusion
- Precise, stable delivery pressure even as the supply pressure decreases
- Low internal volume promotes quick gas flow stabilization and purging
- Models are available for both corrosive and non-corrosive service.
- Major components available in numerous materials
- Machined bar stock body, interstage body, bonnet and piston eliminates porosity found in castings
- Optional acorn nut / preset outlet pressure
- Integral inlet filter
- Compact size (1.25 in. diameter x 4.7 in. high)
- Extremely light weight
- Very competitive pricing

Elgiloy® is a registered trademark of Elgiloy Specialty Metals Division, Combined Metals of Chicago L.L.C.
The Premier 4300S Series pressure reducing regulator's design is remarkably flexible.
Contact Premier Industries for a custom Premier 4300S Series regulator to meet your exact needs.

4300S SERIES

MINIATURE TWO STAGE
Pressure Reducing Regulators

SPECIFICATIONS

- **MAXIMUM INLET PRESSURE:** 3000 psig *(206.84 bar)*
- **OUTLET PRESSURE RANGES:**
  - 0-10 PSIG *(0 - 0.69 bar)*
  - 0-50 PSIG *(0 - 3.45 bar)*
  - 0-100 PSIG *(0 - 6.89 bar)*
  - ***Other pressure ranges available upon request*
- **LEAK RATE:** Bubble Tight
- **WEIGHT:**
  - Approx. 9 oz. for Aluminum
  - Approx. 1.5 lbs for Brass and Stainless Steel
- **FLOW CAPACITY (Cv):** 0.014

MATERIALS OF CONSTRUCTION

- **BODY OPTIONS:**
  - SAE 360 Brass / Nickel Plated *(Standard)*
  - 303 Stainless Steel
  - 316 Stainless Steel
  - 6061-T6 Aluminum / Nickel Plated
  - *Monel® available upon request*
- **BONNET:**
  - SAE 360 Brass / Nickel Plated *(Standard)*
  - 316 Stainless Steel
  - 6061-T6 Aluminum / Nickel Plated
  - *Monel® available upon request*
- **PISTON:**
  - SAE 360 Brass *(Standard)*
  - 303 Stainless Steel
  - *Monel® available upon request*
- **2ND STAGE DIAPHRAGM:**
  - Elgiloy®
- **PISTON SEAL OPTIONS:**
  - Viton®
  - BUNA-N
  - Neoprene
- **MAIN VALVE SEAT:** PTFE

ORDERING/PART NUMBERS

- **Standard,** 10 PSIG *(0.69 bar)* outlet: 50-10364-1
- **Standard,** 50 PSIG *(3.45 bar)* outlet: 50-10364-2
- **Standard,** 100 PSIG *(6.89 bar)* outlet: 50-10364-3
- **Non-Standard**: part # assigned per requirements

PORTING

- **INTEGRATED INLET PORTING:**
  - 1/4" FNPT *(Standard)*
  - 1/8" FNPT
- **OPTIONAL INLET ADAPTER CONNECTIONS:**
  - C-10 (5/8"-18 UNF)
  - All available CGA Connections
- **INTEGRATED OUTLET PORTING:**
  - 1/8" FNPT *(Standard)*
- **OPTIONAL OUTLET ADAPTER CONNECTIONS:**
  - 1/8" MNPT
  - 1/8" Hose Barb
  - 3/16" Hose Barb
  - 1/4" Hose Barb

OPTIONS

- Gauges: Chrome plated steel case with brass socket or stainless steel wetted
- Optional acorn nut / preset outlet pressure: *P/N: 50-11676 (rated for inlet pressures up to 5000 psig / 344.7 bar)*
- Private Label

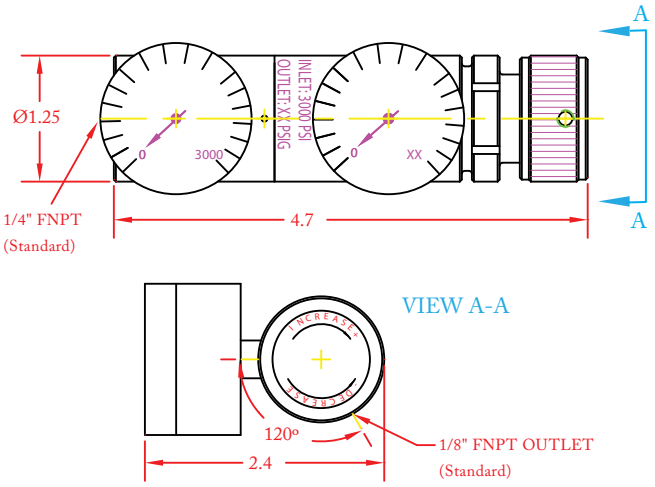

(Part Number: 50-10364 shown above)

Elgiloy® is a registered trademark of Elgiloy Specialty Metals Division, Combined Metals of Chicago L.L.C.
Viton® is a registered trademarks of E.I.duPont de Nemours and Company
Contact factory for material certifications. Fees may apply.

TWO STAGE DIAPHRAGM SENSED

Pressure Reducing Regulators

4500 SERIES

PREMIER INDUSTRIES

1590 99th Ln NE,
Minneapolis, MN 55449
763-786-4020

MADE IN THE USA

Minneapolis, MN

DESCRIPTION

Premier 4500 Series regulators share the same features as Premier 2500 Series regulators, except, the 4500 Series regulators two stage design offers more precise outlet pressure control and a significantly decreased supply pressure effect *(decaying inlet characteristic)*. These diaphragm sensed regulators control inlet pressures up to 3000 PSIG *(206.84 bar)*; they are available with a flow capacity of Cv 0.08 or 0.2, and either a stainless steel or neoprene diaphragm. Premier 4500 Series regulators are available in 316 stainless steel, brass, nickel plated brass, and aluminum.

Typical applications include: cylinder bottle applications, gas and liquid chromatography, high purity carrier gases, zero, span, and calibration gases, lecture bottle applications, research and development labs, low flow purge systems, and industrial controls.

FEATURES

- Very competitive pricing
- Compact versions available with body diameter of 1.5 in. x 5.5 in. long
- Machined bar stock body eliminates porosity found in castings
- Reduced particle contamination with 15 micron valve cartridge filter
- Stable set pressures as cylinder pressure is reduced
- Interstage relief valve
- Stainless diaphragm option minimizes inboard diffusion of air into regulator
- Captured bonnet vent *(standard)*

The Premier 4500 Series pressure reducing regulator's design is remarkably flexible. Contact Premier Industries for a custom 4500 Series regulator to meet your exact needs.

4500 SERIES

TWO STAGE DIAPHRAGM SENSED
Pressure Reducing Regulators

SPECIFICATIONS

- **MAXIMUM INLET PRESSURE:** 3000 PSIG *(206.84 bar)*
- **CONTROL PRESSURE RANGES:**
  - 0-10 PSIG *(0 - 0.69 bar)*
  - 0-25 PSIG *(0 - 1.72 bar)*
  - 0-30 PSIG *(0 - 2.07 bar)*
  - 0-50 PSIG *(0 - 3.45 bar)*
  - 0-100 PSIG *(0 - 6.89 bar)*
  - 0-250 PSIG *(0 - 17.24 bar)*
- **FLOW (Cv):** 0.08, or 0.2

MATERIALS OF CONSTRUCTION

- **BODY OPTIONS:**
  - SAE 360 Brass, Bright Dip
  - SAE 360 Brass, Electroless Nickel Plated
  - 316 Stainless Steel
  - 6061-T6 Aluminum, Clear Anodized
- **BONNET OPTIONS:**
  - SAE 360 Brass, Bright Dip
  - SAE 360 Brass, Electroless Nickel Plated
  - 303 Stainless Steel
  - 6061-T6 Aluminum, Clear Anodized
- **DIAPHRAGM OPTIONS:**
  - 316 Stainless Steel
- **STAINLESS DIAPHRAGM SEAL:** PTFE
- **MAIN VALVE SEAL:** PTFE
- **VALVE SEAT:** PTFE
- **FIRST STAGE RELIEF VALVE SEAL:** PTFE

PORTING

- **INLET PORTING OPTIONS:**
  - 1/8" FNPT
  - 1/4" FNPT
  - All CGA Connections Available:
    – CGA 165, 180, 320, 350, 510, 540, 580, etc.
- **OUTLET PORTING OPTIONS:**
  - 1/8" FNPT
  - 1/4" FNPT

OPTIONS

- Gauges
- Piston sensed first stage
- Hand knob styles
- Panel mounting bonnet & nut(s)
- Outlet shut off valve
- Private labeling
- Anodized colors for aluminum bodies & bonnets

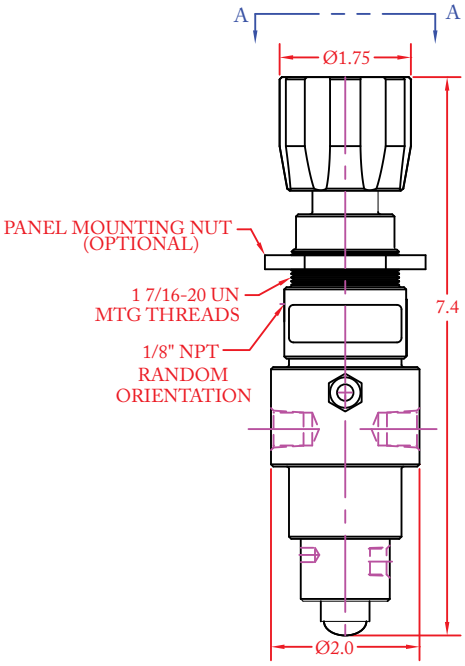

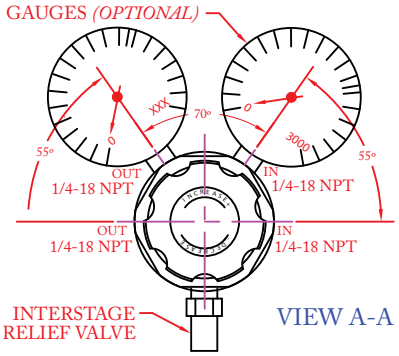

VIEW FOR OPTIONAL INTERNAL OUTLET SHUT OFF VALVE

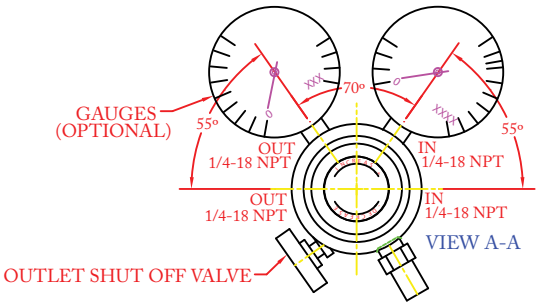

(Part number: 50-11494 shown in drawings above)

Viton® is a registered trademark of E.I.duPont de Nemours and Company
Monel® is a registered trademark of Special Metals Corporation.

TWO STAGE DIAPHRAGM SENSED

Pressure Reducing Regulators

4500 SERIES

PART #	-	1	2	3	4	5	6	7	8
50-11494	-								

1	BODY + *BONNET* MATERIAL & FINISH
2	316 Stainless Steel, cleaned per spec #515 *SAE 360 Brass, Nickel plated*
3	6061-T6 Aluminum, clear anodized *6061-T6 Aluminum, clear anodized*
5	SAE 360 Brass, nickel plated *SAE 360 Brass, nickel plated*
8	SAE 360 Brass, bright dip *SAE 360 Brass, bright dip*
9	316 Stainless Steel, cleaned per spec #515 *303 Stainless Steel cleaned per spec #515*
2	**OUTLET PRESSURE** *(outlet gauge range, if supplied)*
0	0 - 10 PSIG / *0 - 0.69 bar (per application)*
1	0 - 25 PSIG / 0 - 1.72 bar *(0-30 PSIG gauge)*
2	0 - 50 PSIG / 0 - 3.45 bar *(0-60 PSIG gauge)*
3	0 - 100 PSIG / 0 - 6.89 bar *(0-160 PSIG gauge)*
4	0 - 250 PSIG / 0 - 17.24 bar *(0-400 PSIG gauge)*
5	0 - 30 PSIG / 0 - 2.07 bar

3	GAUGES *(optional)*
Blank	no gauges *(standard)*
A	2" diameter, inlet only, stainless steel wetted gauges
B	2" diameter, outlet only, brass wetted gauges
C	2" diameter, inlet & outlet, stainless steel wetted gauges
F	2" diameter, inlet & outlet, brass wetted gauges
J	2" diameter, inlet & outlet, brass wetted/ chrome plated gauges
4	**PANEL MOUNTING NUT** *(optional)*
5	Mounting nut
8	No nut *(standard)*
5	**PORTING OPTIONS**
C	*(Standard, 1/4" inlet, 1/4" outlet)*
D	
I	
N	
O	

6	INTERNAL OUTLET SHUT OFF VALVE *(optional)*
Blank	None *(standard)*
S	Internal outlet shut off valve
7	**PORT SIZE**
Blank	1/4" ports *(standard)*
8	1/8" ports
8	**MAIN VALVE Cv**
Blank	Cv 0.08 *(standard)*
Y	Cv 0.20 w/o filter *(hydraulic service)*
Z	Cv 0.20

Contact factory for material certifications. Fees may apply.

TWO STAGE HIGH PRESSURE PISTON SENSED

Pressure Reducing Regulators

4600 SERIES

PREMIER INDUSTRIES

1590 99th Ln NE,
Minneapolis, MN 55449
763-786-4020

MADE IN THE USA

Minneapolis, MN

DESCRIPTION

Premier 4600 Series high pressure, two stage regulators offer precise and stable outlet pressures despite variations in supply pressure. These piston sensed regulators are designed for inlet pressures up to 6000 PSIG *(413.69 bar)*; and Cv 0.06 or 0.20.

FEATURES

- Cv: 0.06 or 0.20
- Stable set pressures as cylinder pressure is reduced
- Piston sensed
- Max inlet pressure: 6000 psig / 413.69 bar
- Machined bar stock body eliminates porosity found in castings

The Premier 4600 Series pressure reducing regulator's design is remarkably flexible. Contact Premier Industries for a custom 4600 Series regulator to meet your exact needs.

4600 SERIES

TWO STAGE HIGH PRESSURE PISTON SENSED

Pressure Reducing Regulators

SPECIFICATIONS

- **MAX INLET PRESSURE:** 6000 psig / 413.69 bar
- **OUTLET PRESSURE RANGES:**
  - 0-400 PSIG (0-27.58 bar)
  - 5-700 PSIG (0.34-48.26 bar)
  - 5-1000 PSIG (0.34-68.95 bar)
  - 10-1500 PSIG (0.69-103.42 bar)
  - 15-2500 PSIG (1.03-172.37 bar)
- **FLOW (Cv):** 0.06, 0.20

MATERIALS OF CONSTRUCTION

- **BODY:**
  - SAE 360 Brass, Nickel Plated
  - 316 Stainless Steel
- **WETTED COMPONENTS:**
  - 316 Stainless Steel
  - 17-4 Stainless Steel
- **VALVE STEM:**
  - 17-4 Stainless Steel
- **1st STAGE VALVE SEAT:**
  - Vespel®
- **2nd STAGE VALVE SEAT:**
  - PCTFE
- **O-RING MATERIAL OPTIONS:**
  - Buna-N
  - Aflas®
  - EPDM
  - Viton-A®
  - Kalrez® (Contact factory for pricing)
  - Nitrile, low temp
- **BACK-UP RINGS:**
  - PCTFE
- **SEALS, STATIC:**
  - PTFE

PORTING

- **INLET PORTING:**
  - 1/4" NPT
- **OUTLET PORTING:**
  - 1/4" NPT
- **INTERSTAGE PORTING:**
  - 1/8" NPT

OPTIONS

- Gauges
- Private labeling
- Fluted knob, T-handle, tamper resistant acorn nut

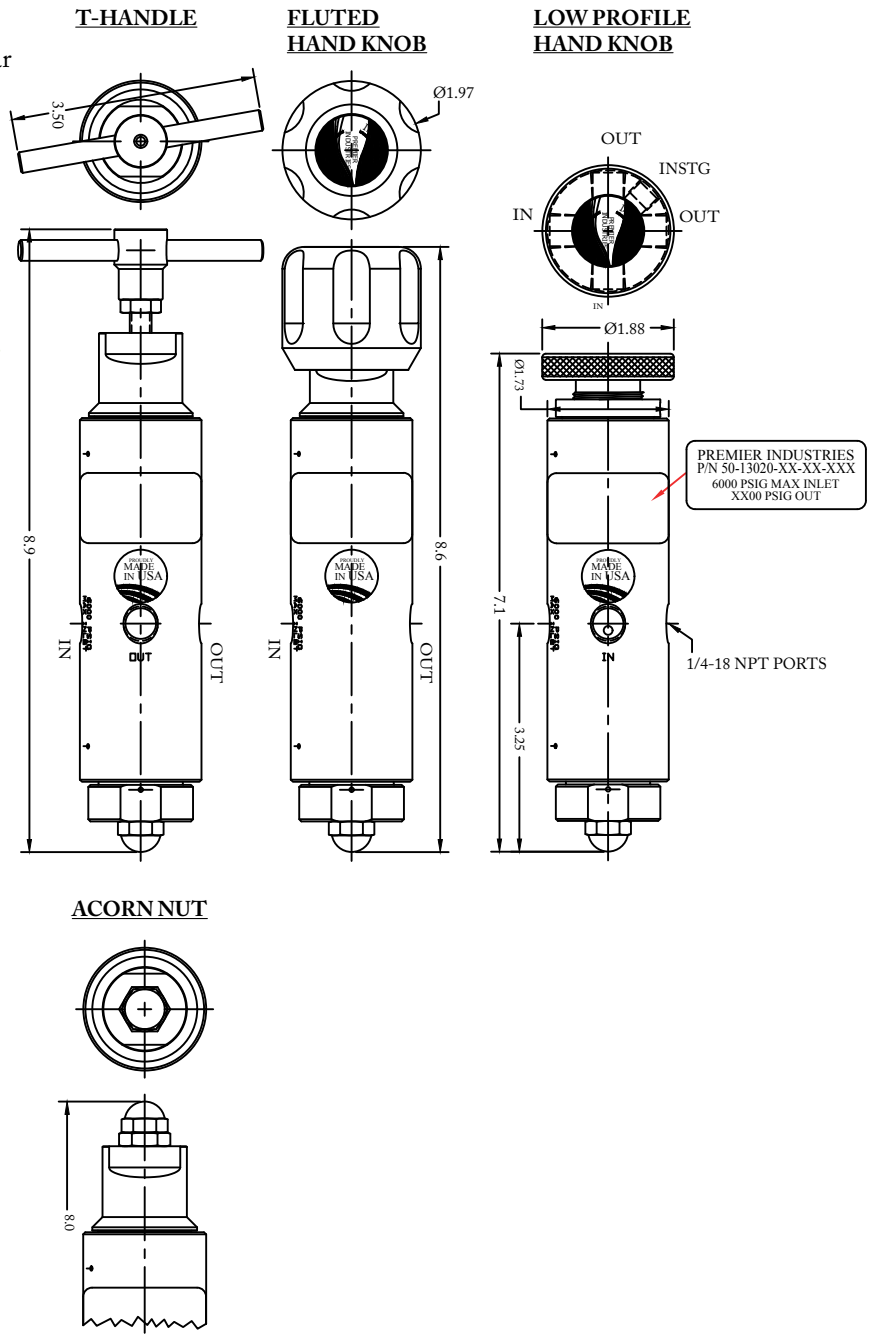

(Part Number: 50-13020 shown above)

Vespel®, Kalrez®, and Viton® are registered trademarks of E.I.duPont de Nemours and Company
Monel® is a registered trademark of Special Metals Corporation.
AFLAS® is a registered trademark of Asahi Glass Co., Ltd.

MINIATURE, TWO STAGE PISTON SENSED, FIXED FLOW

Pressure Reducing Regulators

4700 SERIES

PREMIER INDUSTRIES

1590 99th Ln NE,
Minneapolis, MN 55449
763-786-4020

MADE IN THE USA

Minneapolis, MN

DESCRIPTION

The Premier 4700 Series regulators are: compact, two stage, piston sensed, fixed pressure & flow, pressure reducing regulators. The compact, two-stage design, allows for precise and stable delivery pressures, even as the supply pressure decreases. Premier 4700 Series regulators are designed to control pressures up to 3000 PSIG *(206.84 bar) (dependent upon configuration)*. They are commonly used for:

- Calibration gases
- Industrial hygiene monitors
- Research and development labs
- Regulating a broad range of media compatible with materials of construction.

FEATURES

- Precise, stable delivery pressure and flow, even as supply pressure decreases
- Compact size (1.2 in. diameter x 4.6 in. high)
- Factory adjustable preset (fixed) flow settings
- Numerous porting configurations available
- 40 micron sintered 316 stainless steel integral inlet filter
- Models are available for both corrosive and non-corrosive service.
- Economical pricing
- Machined bar stock body, bonnet and pistons eliminates porosity found in castings
- Optional yoke style design

The Premier 4700 Series pressure reducing regulator's design is remarkably flexible. Contact Premier Industries for a custom 4700 Series regulator to meet your exact needs.

4700 SERIES

MINIATURE, TWO STAGE PISTON SENSED, FIXED FLOW

Pressure Reducing Regulators

SPECIFICATIONS

- **MAXIMUM INLET PRESSURE:** 3000 PSIG *(206.84 bar)*
- **CONSTANT FLOW PRESET:** *Per customer requirements*
- **LEAK RATE:** Bubble Tight
- **INLET SHUT OFF VALVE:** None *(shown)*
  - Rotary/Multi-turn optional
  - Bayonet/Toggle optional

MATERIALS OF CONSTRUCTION

- **BODY & BONNET:**
  - SAE 360 Brass
  - SAE 360 Brass, Electroless Nickel Plated
  - 303 Stainless
  - 6061-T6 Aluminum, Clear Anodized
- **PISTON:**
  - SAE 360 Brass
  - 303 Stainless Steel
- **PISTON SEALS:**
  - Viton®
  - Other elastomers available
- **VALVE SEAT:** PTFE
- **INLET FILTER:** 40 micron sintered 316 Stainless Steel

PORTING

- **INLET PORTING:**
  - C10 (5/8-18 UNF)
  - 1/8" FNPT
  - 1/8" MNPT,
  - 1/4" FNPT
  - 1/4" MNPT
- **OUTLET PORTING:**
  - 1/4" Hose barb
  - 3/16" Hose Barb
  - 1/8" Hose barb
  - 1/8" FNPT
  - 1/8" MNPT
  - 1/4" FNPT
  - 1/4" MNPT

OPTIONS

- Inlet and/or Outlet Gauges
- Anodized Colors for Aluminum Bodies and Bonnets
- Private Label
- CGA inlet connection
- Yokestyle design: *P/N 50-12523*

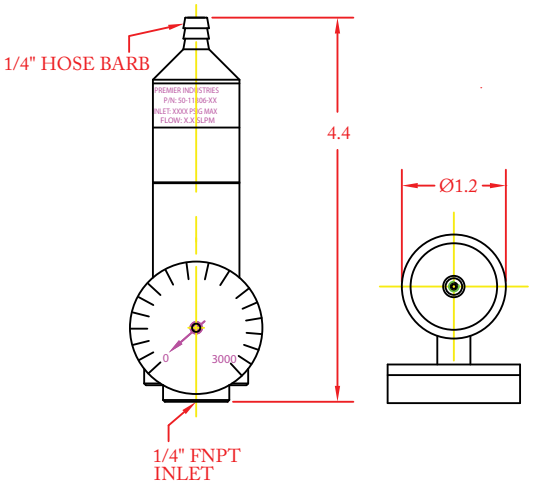

(Part number: 50-11806 shown above)

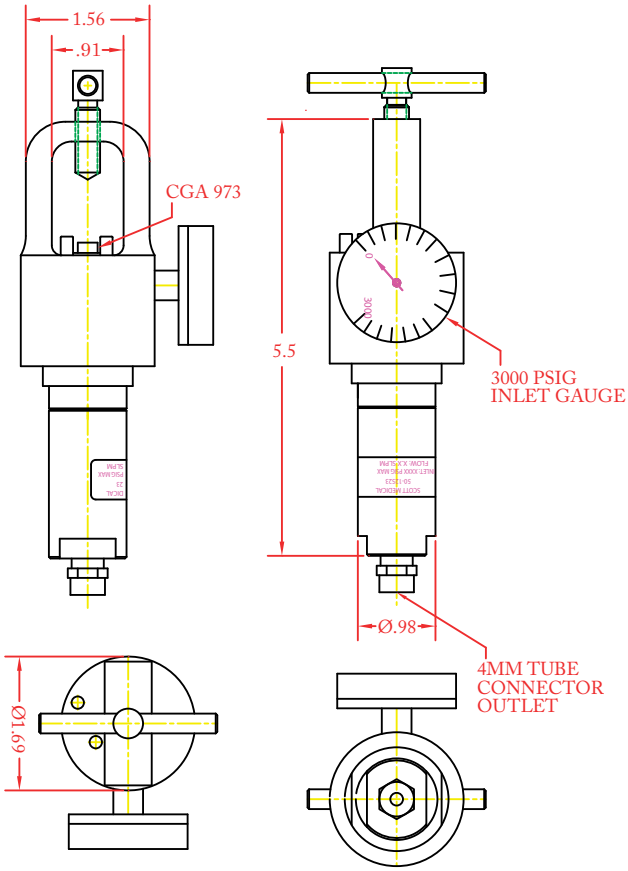

(Part number: 50-12523 shown above)

Viton® is a registered trademark of E.I.duPont de Nemours and Company

Contact factory for material certifications. Fees may apply.

LIVEWELL, OXYGEN INJECTION TWO STAGE, FIXED FLOW

Pressure Reducing Regulators

4700 SERIES

PREMIER INDUSTRIES

1590 99th Ln NE,
Minneapolis, MN 55449
763-786-4020

MADE IN THE USA

Minneapolis, MN

DESCRIPTION

Premier's 4700 Series Livewell Oxygen Injection Regulator is a compact, two stage, piston sensed, fixed flow, pressure reducing regulator. This 4700 series regulator was developed in cooperation with the Texas Parks & Wildlife Department's Inland Fisheries team in San Antonio. Their research shows that "dissolved oxygen is the single most important factor for keeping bass alive."**

The Livewell Oxygen Injection Regulator is all aluminum with a brass CGA 540 inlet connection for a secure attachment to oxygen cylinders. The two stage design insures the consistent delivery of the recommended flow of oxygen at all cylinder pressures. Your fish will be getting all the oxygen they need and you'll be maximizing the life of every oxygen cylinder. The rugged stainless steel cased inlet gauge will constantly show the amount of oxygen remaining in the cylinder.

The article link at the bottom of this page has a substantial amount of valuable information about livewell management. It also contains a link to a slideshow demonstrating the proper set-up of a livewell oxygenation system.

FEATURES

- Engineered specifically for livewell oxygen injection
- Very competitive pricing
- Factory preset (fixed) flow setting of 0.1 LPM
- Compact size (1.2 in. diameter x 6.2 in. high)
- Machined bar stock body, and bonnet eliminates porosity found in castings
- Inlet Filter: 40 micron 316 stainless steel
- 0-3000 PSIG inlet gauge w/ stainless steel case & brass socket

The Premier 4700 Series regulator's design is remarkably flexible.
Contact Premier Industries for a custom 4700 Series regulator to meet your exact needs.

*** Randy Myers and Jason Driscoll, Inland Fisheries Division Texas Parks and Wildlife Department, June 2011*
http://www.tpwd.state.tx.us/fishboat/fish/didyouknow/inland/livewells.phtml

4700 SERIES

LIVEWELL, OXYGEN INJECTION TWO STAGE, FIXED FLOW

Pressure Reducing Regulators

SPECIFICATIONS

- **MAXIMUM INLET PRESSURE**: 3000 PSIG
- **PRESET OUTLET PRESSURE**: 30 ± 5 PSIG
- **FLOW**: 0.1 SLPM
- **LEAK RATE**: Bubble Tight
- **SHUT OFF VALVE**: None
- **WEIGHT**: 0.25 lbs

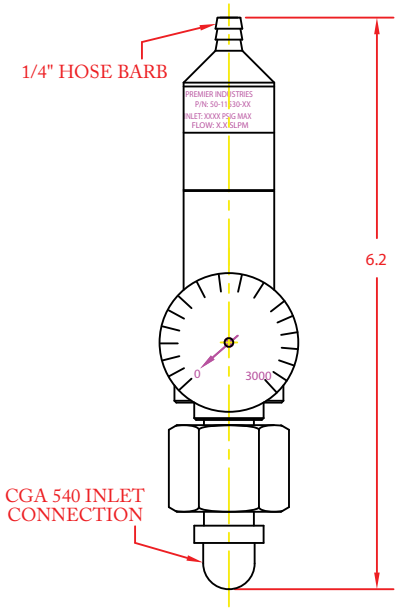

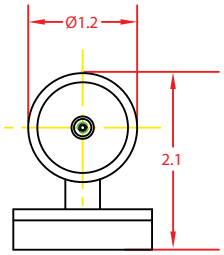

MATERIALS OF CONSTRUCTION

- **BODY:**
  - 6061-T6 Aluminum, Clear Anodized
- **BONNET:**
  - 6061-T6 Aluminum, Clear Anodized
- **PISTON:**
  - SAE 360 Brass
- **PISTON SEALS:**
  - EPDM
- **VALVE SEAT:**
  - Teflon®

PORTING

- **INLET PORTING:** 1/4"FNPT
  - CGA 540 connection
- **OUTLET PORTING:**
  - 1/4" hose barb

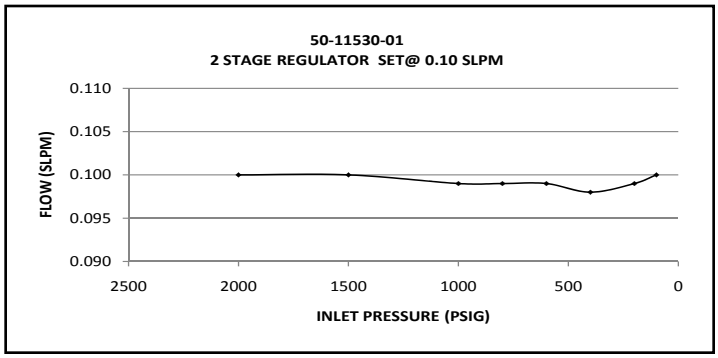

ORDERING

- **Part Number:** 50-11530-01

Teflon® and Viton® are registered trademarks of E.I.duPont de Nemours and Company
Contact factory for material certifications. Fees may apply.

HIGH FLOW, HIGH PRESSURE, PISTON SENSED

Pressure Reducing Regulators

5000 SERIES

PREMIER INDUSTRIES

1590 99th Ln NE,
Minneapolis, MN 55449
763-786-4020

MADE IN THE USA

Minneapolis, MN

DESCRIPTION

The Premier 5000 Series regulators are high flow, piston sensed, pressure reducing regulators, designed for inlet pressures up to 4500 PSIG *(310.26 bar)*, outlet pressures of 0-2500 PSIG (*0-172.37 bar)* with a Cv of 2.0 or 1.0.

Designs are available with adjustable or preset outlet pressures. Premier 5000 Series regulators are used to regulate to a broad range of non-corrosive and corrosive media (based on materials of construction).

FEATURES

- High flow (Cv 2.0 or 1.0)
- 4500 PSIG *(310.26 bar)* max inlet
- Non-venting
- Very competitive pricing
- Machined bar stock body, bonnet and piston eliminates porosity found in castings

The Premier 5000 Series pressure reducing regulator's design is remarkably flexible. Contact Premier Industries for a custom 5000 Series regulator to meet your exact needs.

5000 SERIES

HIGH FLOW, HIGH PRESSURE, PISTON SENSED

Pressure Reducing Regulators

SPECIFICATIONS

- **MAXIMUM INLET PRESSURE :** 4500 PSIG *(310.26 bar)*
- **CONTROL PRESSURE RANGES:**
  - 0-850 PSIG (*0-58.61 bar)*
  - 0-2500 PSIG (*0-172.37 bar)*
- **Cv:** 2.0, 1.0
- **LEAK RATE :** Bubble tight

MATERIALS OF CONSTRUCTION

- **BODY**: 303 Stainless Steel
- **BONNET**: 303 Stainless Steel
- **SEALS**:
  - Viton®
- **MAIN VALVE SEAT**: Vespel®
- **WETTED PARTS**: 300 Series Stainless Steel
- **HAND KNOB:** 6061-T6 Aluminum

PORTING

- **INLET PORTING**:
  - 1/2-14 NPT
  - 1/4-18 FNPT
- **OUTLET PORTING**:
  - 1/2-14 NPT
  - 1/4-18 FNPT

OPTIONS

- Private label
- Cv 1.0: *P/N: 50-12403*
- Cv 2.0: *P/N: 50-11969*

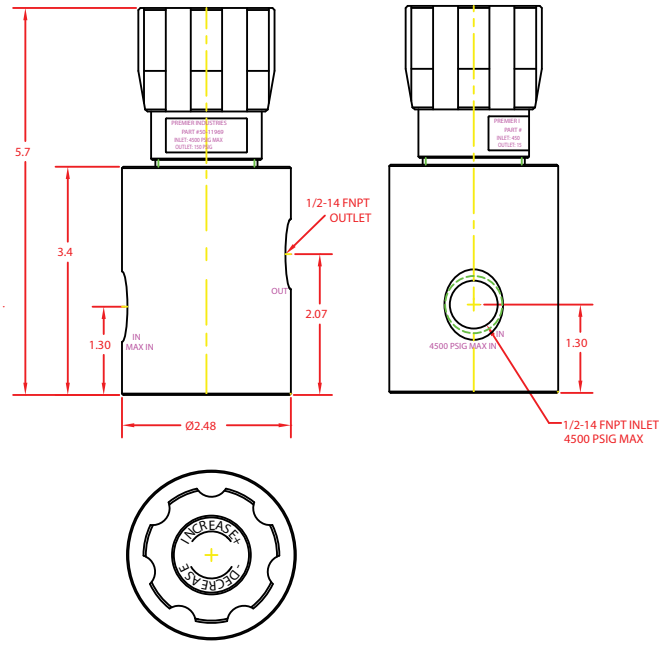

P/N shown above: 50-11969 ***(Cv 2.0)***

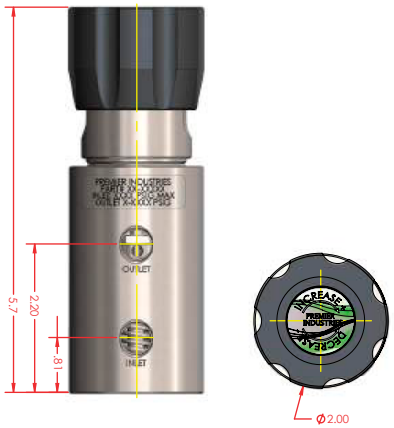

P/N shown above: 50-12403 ***(Cv 1.0)***

Vespel® & Viton® are registered trademarks of E.I.duPont de Nemours and Company
Contact factory for material certifications. Fees may apply.

HIGH FLOW DOME LOADED
Pressure Reducing Regulators

5033DL SERIES

PREMIER INDUSTRIES

1590 99th Ln NE,
Minneapolis, MN 55449
763-786-4020

MADE IN THE USA
Minneapolis, MN

DESCRIPTION

Premier 5033DL Series dome loaded, single stage, high flow, piston sensed, pressure reducing regulators, designed for inlet pressures up to 6000 PSIG *(413.69 bar)*, and Cv 3.3. The 5033DL features an externally loaded 1:1 dome load with a max outlet pressure of 6000 PSIG *(413.69 bar)*. Optional external sensing port for improved accuracy.

FEATURES

- Flow capacity (Cv): 3.3
- 6000 PSIG *(413.69 bar)* max inlet pressure
- Piston Sensed
- 1:1 dome load
- Optional external sensing port
- Economical pricing
- Machined bar stock body eliminates porosity found in castings

The Premier 5033DL Series pressure reducing regulator's design is remarkably flexible.
Contact Premier Industries for a custom 5033DL Series regulator to meet your exact needs.

5033DL SERIES

HIGH FLOW DOME LOADED
Pressure Reducing Regulators

SPECIFICATIONS

- **MAXIMUM INLET PRESSURE:** 6000 PSIG *(413.69 bar)*
- **MAXIMUM OUTLET PRESSURE:** 6000 PSIG *(413.69 bar)*
- **FLOW (Cv):** 3.3

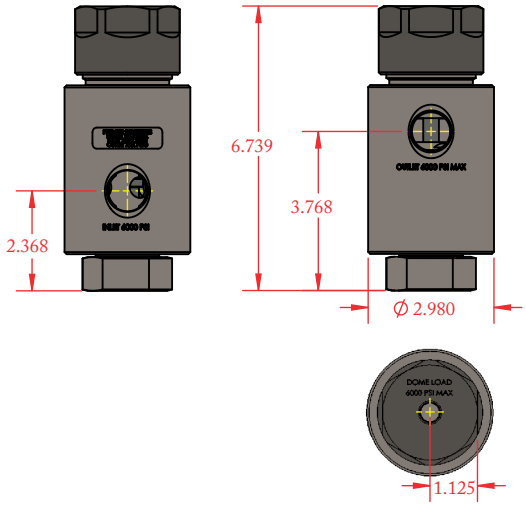

(Part number: 30-10429 shown above)

MATERIALS OF CONSTRUCTION

- **BODY:**
  - 316 Stainless Steel
- **PISTON:**
  - 316 Stainless Steel
- **MAIN VALVE:**
  - 17-4 Stainless Steel
- **MAIN VALVE SEAT OPTIONS:**
  - PCTFE
  - PEEK®
- **O-RING OPTIONS:**
  - BUNA-N
  - Viton®
  - BUNA-N
  - EPDM
- **BACK-UP RINGS:**
  - PTFE

PORTING

- **STANDARD INLET:**
  - 3/4 FNPT
- **STANDARD OUTLET:**
  - 3/4 FNPT
- **OPTIONAL INLET:**
  - 1" SAE AS5202 *(P/N 30-10639)*
- **OPTIONAL OUTLET:**
  - 1" SAE AS5202 *(P/N 30-10639)*
- **EXTERNAL SENSING PORT** *(OPTIONAL)*:
  - 1/4 AS5202
- **DOME PORT:**
  - 1/4 FNPT

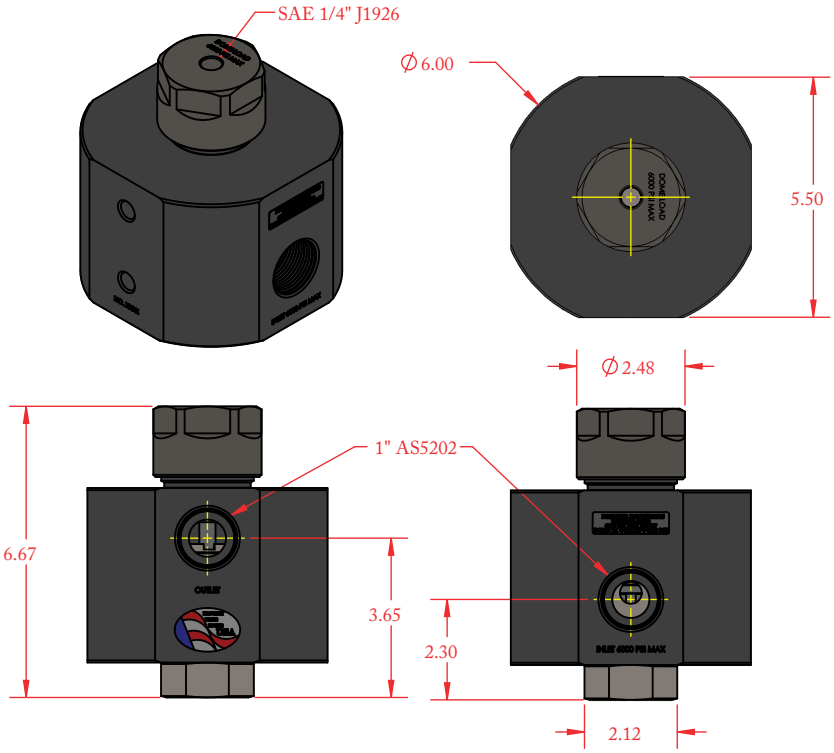

(Part number: 30-10639 shown above)

OPTIONS

- Private Label
- 1" SAE AS5202 process ports and a larger body diameter (P/N 30-10639)

Viton® is a registered trademark of E.I.duPont de Nemours and Company. PEEK® is a registered trademark of Victrex PLC

HIGH FLOW DOME LOADED
Pressure Reducing Regulators

5033DL SERIES

PART #	-	1	2	3	4
30-10429	-				

1	SEAT MATERIAL OPTIONS
1	PCTFE
2	PEEK®

2	O-RING MATERIAL OPTIONS
0	Buna-N
2	Viton®
5	EPDM

3	BODY MATERIAL
1	316 Stainless Steel

4	PORTS
1	3/4" FNPT

Viton® is a registered trademark of E.I.duPont de Nemours and Company. PEEK® is a registered trademark of Victrex PLC

HIGH FLOW PISTON SENSED
Pressure Reducing Regulators

5050 SERIES

PREMIER INDUSTRIES

1590 99th Ln NE,
Minneapolis, MN 55449
763-786-4020

MADE IN THE USA
Minneapolis, MN

DESCRIPTION

Premier 5050 Series, single stage, high flow, piston sensed, pressure reducing regulators, designed for inlet pressures up to 1000 PSIG *(68.95 bar)*, outlet pressures up to 200 psig *(13.79 bar)* and Cv 5.0.

FEATURES

- Flow capacity (Cv): 5.0
- 1000 PSIG *(68.95 bar)* max inlet pressure
- Balanced stem for increased outlet pressure stability
- Piston sensed
- Optional preset outlet pressure
- Non-venting & self venting designs available
- Economical pricing
- Compact size
- Machined bar stock body eliminates porosity found in castings

The Premier 5050 Series pressure reducing regulator's design is remarkably flexible.
Contact Premier Industries for a custom 5050 Series regulator to meet your exact needs.

5050 SERIES

HIGH FLOW PISTON SENSED
Pressure Reducing Regulators

SPECIFICATIONS

- **MAXIMUM INLET PRESSURE:** 1000 psig *(68.95 bar)*
- **PRESET OUTLET PRESSURE (50-12560):**
  - 100 psig *(6.89 bar)* max
- **OUTLET PRESSURE RANGE (50-12860 & 50-13144)**
  - 0-25 psig *(0-1.72 bar)*
  - 0-50 psig *(0-3.45 bar)*
  - 0-100 psig *(0-6.89 bar)*
  - 0-150 psig *(0-10.34 bar)*
  - 0-200 psig *(0-13.79 bar)*
- **FLOW (Cv):** 5.0

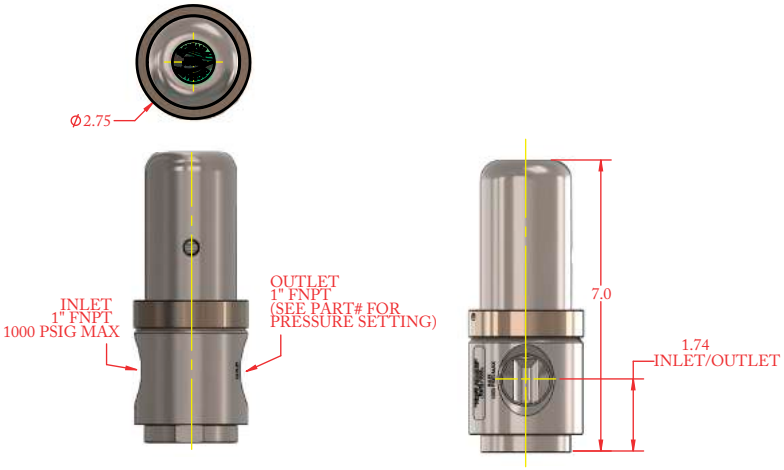

(Part number: 50-12560 shown above)

MATERIALS OF CONSTRUCTION

- **BODY MATERIAL OPTIONS:**
  - 303 Stainless Steel
  - 316 Stainless Steel
  - 6061-T6 Aluminum (Clear Anodize)
  - Monel 400® *(50-12560 only)*
- **MAIN VALVE SEAT OPTIONS:**
  - Buna-n
  - Viton®
- **O-RING SEAL OPTIONS:**
  - Buna-n
  - Viton®

PORTING

- **INLET OPTIONS:**
  - 1" FNPT
  - 3/4" FNPT
- **OUTLET OPTIONS:**
  - 1" FNPT
  - 3/4" FNPT

(Part numbers: 50-12860 / 50-13144 shown above)

OPTIONS

- Private labeling

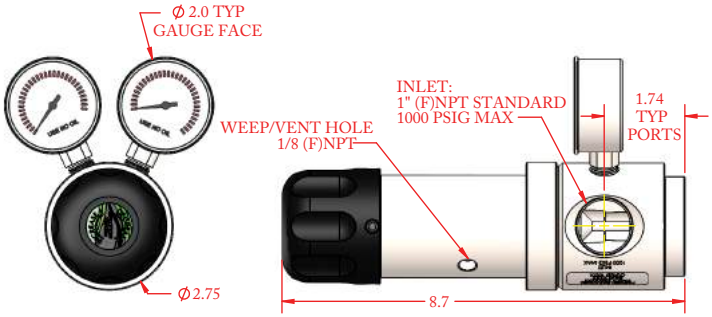

(Part numbers: 50-12860 / 50-13144 shown above)

Viton® is a registered trademark of E.I.duPont de Nemours and Company
Elgiloy® is a registered trademark of Elgiloy Special Metals Division, Combined Metals of Chicago L.L.C
Monel® is a registered trademark of Special Metals Corporation

HIGH FLOW PISTON SENSED
Pressure Reducing Regulators

5050 SERIES

PRESET OUTLET PRESSURE, NON-VENTING

PART #	-	1	2	-	XXX	-	MODS
50-12560	-			-		-	

1	BODY / *PROCESS WETTED COMPONENT MATERIALS*
1	303 Stainless Steel Body / *316 Stainless Steel Valve Spring*
2	316 Stainless Steel Body / *316 Stainless Steel Valve Spring*
3	Monel 400® Body *Elgiloy® valve & load springs**
4	Aluminum, Clear Anodize/ *316 Stainless Steel Valve Spring & 300 Series main valve components*

**NON-STANDARD NON-WETTED COMPONENTS USED FOR MONEL CONFIGURATION LOAD SPRING IS ELGILOY AND ALL OTHER NON-WETTED COMPONENTS ARE 316SS*

2	SEALS / SEAT MATERIAL
1	Buna-n
2	Viton®

PRESET OUTLET PRESSURE

Specify preset outlet pressure setting in "XXX" psig. 100 psig maximum setting.

(Examples, use "025" for 25 psig outlet setting, "075" is 75 psig outlet setting)

Outlet setting will be made at maximum rated inlet pressure unless specified otherwise when ordered.

MODIFICATIONS
(Include all applicable)

BLANK	Standard porting/ no gauges
A	3/4 FNPT process ports
B	Include gauge ports (1/4 FNPT) / no gauges
C	Include gauge ports with gauges installed

Viton® is a registered trademark of E.I.duPont de Nemours and Company
Elgiloy® is a registered trademark of Elgiloy Special Metals Division, Combined Metals of Chicago L.L.C
Monel® is a registered trademark of E.I.duPont de Nemours and Company

HIGH FLOW DOME LOADED
Pressure Reducing Regulators

5050DL SERIES

PREMIER INDUSTRIES

1590 99th Ln NE,
Minneapolis, MN 55449
763-786-4020

MADE IN THE USA
Minneapolis, MN

DESCRIPTION

Premier 5050DL Series dome loaded, single stage, high flow, diaphragm sensed, pressure reducing regulators, designed for inlet pressures up to 1000 PSIG *(68.95 bar)*, and Cv 5.0. The 5050DL features a 1:1 dome load with a max load pressure of 100 PSIG *(6.89 bar)*. Balanced stem design significantly reduces supply pressure effect.

FEATURES

- Flow capacity (Cv): 5.0
- 1000 PSIG *(68.95 bar)* max inlet pressure
- Balanced stem for increased outlet pressure stability
- Diaphragm sensed
- 1:1 dome load
- Economical pricing
- Compact size
- Non-venting
- Machined bar stock body eliminates porosity found in castings

The Premier 5050DL Series pressure reducing regulator's design is remarkably flexible.
Contact Premier Industries for a custom 5050DL Series regulator to meet your exact needs.

5050DL SERIES

HIGH FLOW DOME LOADED
Pressure Reducing Regulators

SPECIFICATIONS

- **MAXIMUM INLET PRESSURE:** 1000 PSIG *(68.95 bar)*
- **OUTLET PRESSURE RANGE:**
  - 0-100 PSIG *(0-6.89 bar)*
- **MAX DOME LOAD:** 110 PSIG *(7.58 bar)*
- **LOAD RATIO:** 1:1**

  *** an additional 3-5 psig dome load is required to maintain a 1:1 outlet pressure to dome load ratio.*
- **FLOW (Cv):** 5.0

MATERIALS OF CONSTRUCTION

- **BODY, BONNET, BACK CAP:**
  - 316 Stainless Steel
  - 303 Stainless Steel
  - 6061-T6 Aluminum, Clear Anodize
- **DIAPHRAGM:**
  - Buna-N
- **DIAPHRAGM PLATE:**
  - 316 Stainless Steel
- **MAIN VALVE SEAT:**
  - Buna-N
- **MAIN VALVE:**
  - 316 Stainless Steel
- **O-RINGS:**
  - Buna-N

PORTING

- **STANDARD INLET:**
  - 1" FNPT
- **STANDARD OUTLET:**
  - 1" FNPT
- **DOME LOAD PORT:**
  - 1/4" FNPT

OPTIONS

- Private labeling
- Dome loaded bias design
- Spring loaded design
- Air loaded design

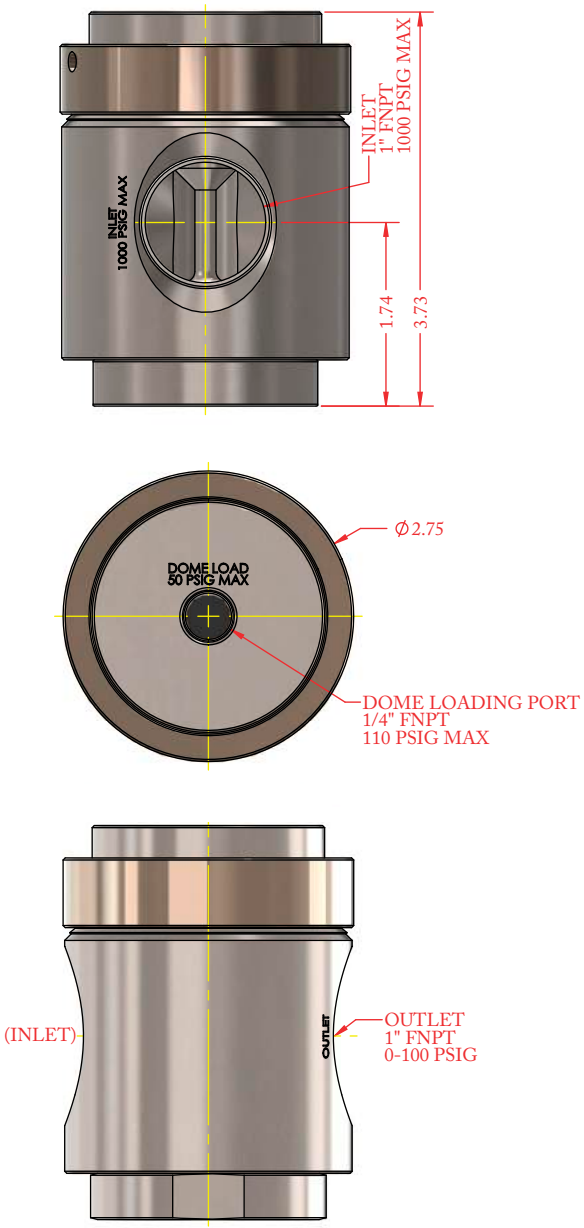

(Part number: 50-12456 shown above)

HIGH FLOW DOME LOADED
Pressure Reducing Regulators

5050DL SERIES

PART #	-	1
50-12456	-	

1	BODY MATERIAL *& FINISH*
1	6061-T6 Aluminum, *Clear Anodize*
2	303 Stainless Steel, *Cleaned per spec #515*
3	316 Stainless Steel, *Cleaned per spec #515*
Contact facility for other material options.	

HIGH FLOW DOME LOAD WITH SPRING BIAS

Pressure Reducing Regulators

5050DLB SERIES

PREMIER INDUSTRIES

1590 99th Ln NE,
Minneapolis, MN 55449
763-786-4020

MADE IN THE USA

Minneapolis, MN

DESCRIPTION

Premier 5050DLB Series dome loaded / bias spring, single stage, high flow, piston sensed, pressure reducing regulators. Premier 5050DLB Series regulator feature inlet pressures up to 1000 PSIG *(68.95 bar)*, Cv 5.0, maximum dome load of 100 PSIG *(6.89 bar)* and a preset bias pressure. 5050DLB Series regulators are designed for tracking applications, where a constant differential pressure is desired.

FEATURES

- Flow capacity (Cv): 5.0
- 1000 PSIG *(68.95 bar)* max inlet pressure
- Adjustable spring bias pressure
- Non-venting
- Compact size
- Machined bar stock body eliminates porosity found in castings

The Premier 5050DLB Series pressure reducing regulator's design is remarkably flexible.
Contact Premier Industries for a custom 5050DLB Series regulator to meet your exact needs.

5050DLB SERIES

HIGH FLOW DOME LOAD WITH SPRING BIAS

Pressure Reducing Regulators

SPECIFICATIONS

- **MAXIMUM INLET PRESSURE:** 1000 PSIG *(68.95 bar)*
- **MAX DOME LOAD:** 100 PSIG *(6.89 bar)*
- **MAX BIAS PRESSURE:** 200 PSIG *(13.79 bar)*
- **OUTLET PRESSURE:** dome load pressure + bias pressure
- **FLOW (Cv):** 5.0

MATERIALS OF CONSTRUCTION

- **BODY, BONNET, BACK CAP:**
  - 316 Stainless Steel
  - 303 Stainless Steel
  - 6061-T6 Aluminum, Clear Anodize
- **PISTON:**
  - 316 Stainless Steel
  - 303 Stainless Steel
  - SAE 360 Brass
- **MAIN VALVE SEAT:**
  - Buna-N
- **MAIN VALVE:**
  - 316 Stainless Steel
- **O-RINGS:**
  - Buna-N
- **DOME LOAD BIAS SPRING:**
  - 302 Stainless Steel

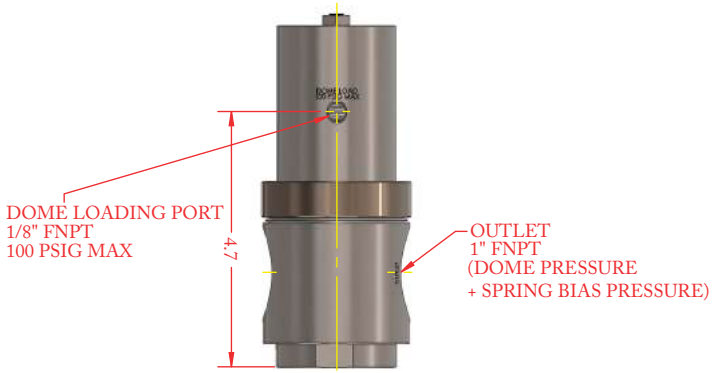

PORTING

- **STANDARD INLET:**
  - 1" FNPT*
- **STANDARD OUTLET:**
  - 1" FNPT*

**See modifications list on page 3 for 1/2" in/out port mod.*

- **DOME LOAD PORT:**
  - 1/8" FNPT

OPTIONS

- Private labeling

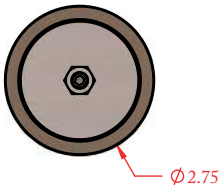

(Part number: 50-12510 shown above)

HIGH FLOW DOME LOAD WITH SPRING BIAS

Pressure Reducing Regulators

5050DLB SERIES

PART #	-	1	-	2 3	-	MODS
50-12510	-		-		-	

1	BODY/BONNET/BACK CAP MATERIAL *& FINISH*
1	6061-T6 Aluminum, *Clear Anodize*
2	303 Stainless Steel, *Cleaned per spec #515*
3	316 Stainless Steel, *Cleaned per spec #515*

2 3	SPRING BIAS
	Specify spring bias pressure in "XX" psig *(Examples, '05" is 5 psig spring bias, '12' is 12 psig spring bias. Note: max bias pressure: 200 psig/13.79 bar)*

MODIFICATIONS	
BLANK	standard configuration
12	1/2" FNPT process ports
G	1/4" FNPT inlet/outlet gauges

Contact factory for material certifications. Fees may apply.

HIGH FLOW DOME LOADED
Pressure Reducing Regulators

5060DL SERIES

PREMIER INDUSTRIES

1590 99th Ln NE,
Minneapolis, MN 55449
763-786-4020

MADE IN THE USA
Minneapolis, MN

DESCRIPTION

Premier 5060DL Series dome loaded, single stage, high flow, piston sensed, pressure reducing regulators, designed for inlet pressures up to 6000 PSIG *(413.69 bar)*, and Cv 6.0. The 5060DL features an externally loaded 1:1 dome load with a max outlet pressure of 6000 PSIG *(413.69 bar)*. Optional external sensing port for improved accuracy.

FEATURES

- Flow capacity (Cv): 6.0
- 6000 PSIG *(413.69 bar)* max inlet pressure
- Piston Sensed
- 1:1 dome load
- Optional external sensing port
- Economical pricing
- Machined bar stock body eliminates porosity found in castings

The Premier 5060DL Series pressure reducing regulator's design is remarkably flexible. Contact Premier Industries for a custom 5060DL Series regulator to meet your exact needs.

5060DL SERIES

HIGH FLOW DOME LOADED
Pressure Reducing Regulators

SPECIFICATIONS

- **MAXIMUM INLET PRESSURE:** 6000 PSIG *(413.69 bar)*
- **MAXIMUM OUTLET PRESSURE:** 6000 PSIG *(413.69 bar)*
- **FLOW (Cv):** 6.0

MATERIALS OF CONSTRUCTION

- **BODY:**
  - 316 Stainless Steel
- **PISTON:**
  - 316 Stainless Steel
- **MAIN VALVE:**
  - 17-4 Stainless Steel
- **MAIN VALVE SEAT:**
  - PEEK®
- **O-RING OPTIONS:**
  - BUNA-N
  - Viton®
- **BACK-UP RINGS:**
  - PTFE

PORTING

- **STANDARD INLET:**
  - 3/4 FNPT
  - 3/4 SAE AS5202*

**SAE AS5202 supersedes MS33649*

- **STANDARD OUTLET:**
  - 3/4 FNPT
  - 3/4 SAE AS5202*

**SAE AS5202 supersedes MS33649*

- **EXTERNAL SENSING PORT** *(OPTIONAL)*:
  - 1/4 AS5202
- **DOME PORT:**
  - 1/4 FNPT

OPTIONS

- Private Label

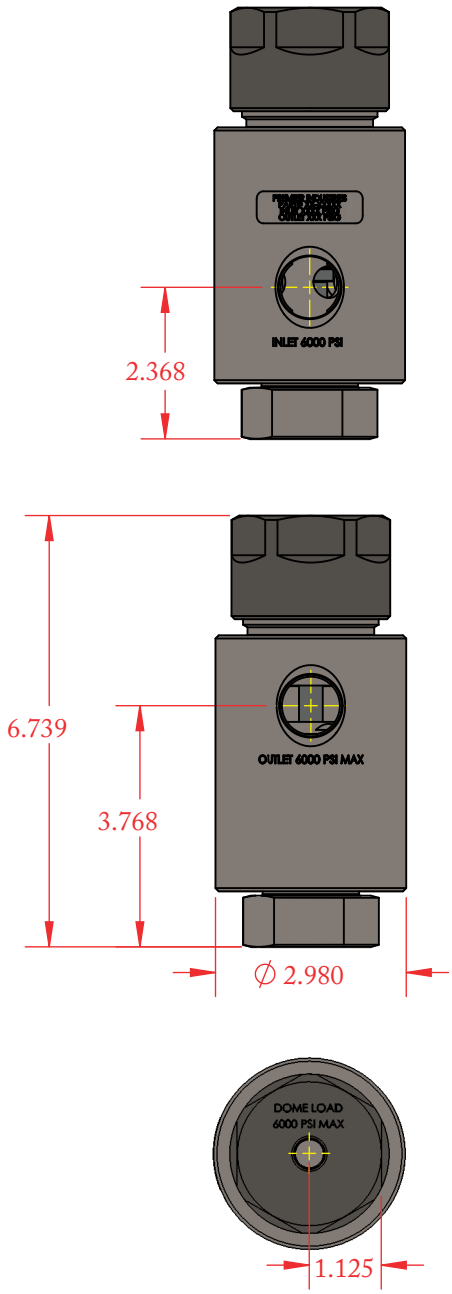

(Part number: 30-10609 shown above)

Viton® is a registered trademark of E.I.duPont de Nemours and Company. PEEK® is a registered trademark of Victrex PLC

HIGH FLOW DOME LOADED
Pressure Reducing Regulators

5060DL SERIES

PART #	-	1	2	3	4
30-10609	-				

1	SEAT MATERIAL OPTIONS
1	PEEK®
2	**O-RING MATERIAL OPTIONS**
1	Buna-N
2	Viton®
3	**BODY MATERIAL**
1	316 Stainless Steel

4	PORTING *(INLET/OUTLET)*
1	3/4" FNPT
2	3/4" AS5202*

**SAE AS5202 supersedes MS33649*

Viton® is a registered trademark of E.I.duPont de Nemours and Company

PEEK® is a registered trademark of Victrex PLC

HYDRAULIC HIGH PRESSURE

Pressure Reducing Regulators

6000 SERIES

PREMIER INDUSTRIES

1590 99th Ln NE,
Minneapolis, MN 55449
763-786-4020

MADE IN THE USA

Minneapolis, MN

DESCRIPTION

The hydraulic, high pressure Premier 6000 Series pressure reducing regulators are piston sensed, variable pressure & delivery regulators, designed for inlet and outlet pressures up to 10000 PSIG *(689.48 bar)*. 6000 Series regulators feature a wide range of inlet and outlet configurations, Cv: 0.06, 0.12, or 0.2, adjustable captured venting, and compatibility with a broad range of non-corrosive and corrosive media (based on materials of construction).

FEATURES

- Piston Sensed
- Main valve cartridge
- Captured venting
- Black anodized aluminum knob
- Machined bar stock body, bonnet and piston eliminates porosity found in castings
- Very competitive pricing
- Numerous optional features available
- NACE MR0175 compatible materials are available

The Premier 6000 Series pressure reducing regulator's design is remarkably flexible.
Contact Premier Industries for a custom 6000 Series regulator to meet your exact needs.

6000 SERIES

HYDRAULIC HIGH PRESSURE
Pressure Reducing Regulators

SPECIFICATIONS

- **MAXIMUM INLET PRESSURE:**
  - 10000 PSIG *(689.5 Bar)*
- **CONTROL PRESSURE RANGES:**
  - 0-200 PSIG *(0-13.8 Bar)*
  - 5-500 PSIG *(0.35-34.5 Bar)*
  - 5-800 PSIG *(0.35-55.2 Bar)*
  - 10-1500 PSIG *(0.69-103.4 Bar)*
  - 15-2500 PSIG *(1.0-172.4 Bar)*
  - 25-4000 PSIG *(1.7-275.8 Bar)*
  - 50-6000 PSIG *(3.4-413.7 Bar)*
  - 100-10000 PSIG *(6.9-689.5 Bar)*
- **FLOW CAPACITY**
  - **Main Valve Cv:** 0.06, 0.12, or 0.20
  - **Vent Valve Cv:** 0.06
- **DESIGN PROOF PRESSURE:** 150% maximum rated
- **OPERATING TEMPERATURE:****
  - -15°F/-26°C to 165°F/74°C (BUNA-N)
  - -4°F/-20°C to 165°F/74°C (Viton®)
  - -65°F/-54°C to 165°F/74°C (EPDM)
  - 0°F/-17°C to 165°F/74°C (KALREZ®)
  - 15°F/-9°C to 165°F/74°C (ALFAS)
  - -50°F/-45°C to 165°F/74°C (Nitrile, Lo-temp)

PANEL NUT STYLE

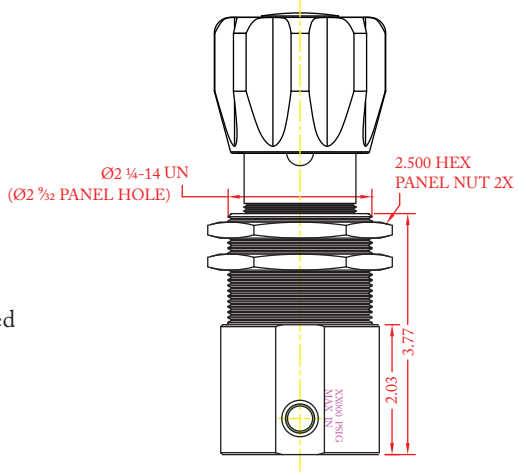

PANEL MOUNTING BRACKET STYLE

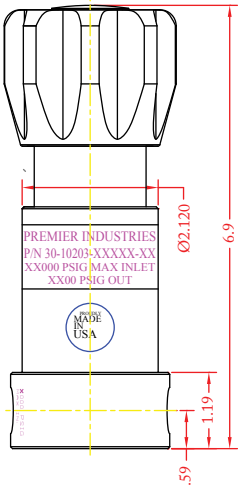

(Part Number: 30-10203 shown above)

MATERIALS OF CONSTRUCTION

- **BODY:** 316 Stainless Steel *(standard)*
- **BONNET:** 17-4 Stainless Steel
- **PISTON:** 316 Stainless Steel
- **VENT/MAIN VALVE STEM:** 17-4 Stainless Steel, hardened
- **VALVE SEAT:** 17-4 Stainless Steel, hardened
- **VENT VALVE SEAT:** 316 Stainless Steel
- **WETTED, OTHER:** 316 Stainless Steel & 17-4 Stainless Steel
- **WETTED, NACE COMPLIANT:** 316 Stainless Steel, A286, & Elgiloy®
- **SEALS:** Viton®, Buna-N, EPDM, AFLAS, Nitrile (Lo-Temp), Kalrez®
- **BACK-UP RINGS:** PTFE & PCTFE

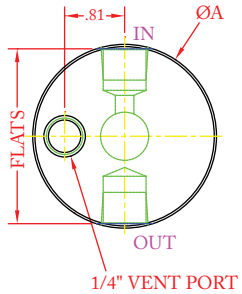

PORT TYPE	ØA	FLATS
NPT, NPTF	Ø2.48	——
1/4" OTHER	Ø2.48	2.36
1/4" & 3/8" SAE	Ø2.98	2.81
3/8" M.P.	Ø2.98	2.81
1/2" SAE	Ø3.23	2.98
9.16" M.P.	Ø3.23	2.98

**Bodies w/ 'L' porting configurations and 3/8" ports and larger require a larger ØA*

PORTING

- **INLET & OUTLET PORT OPTIONS:**
  - 1/4" FNPT, SAE J1926, SAE AS5202**, NPTF or medium pressure
  - 3/8" FNPT, SAE J1926, SAE AS5202**, NPTF or medium pressure
  - 1/2" FNPT, SAE J1926, SAE AS5202**, or NPTF
  - 9/16" medium pressure
- **VENT PORT:**
  - 1/4" FNPT, SAE J1926, SAE AS5202**, NPTF, or medium pressure
- **GAUGE PORTS:** 1/4" FNPT

OPTIONAL ITEMS

- Air loaded design *(P/N: 30-10219)*
- Panel mounting bracket: *P/N: 30-10059 (Ø2.15 panel hole)*
- Panel mounting nuts: *P/N: 30-10189 (Ø2.28 panel hole)*
- Gauges
- Private label
- Non-venting

OPTIONAL PANEL MOUNTING BRACKET

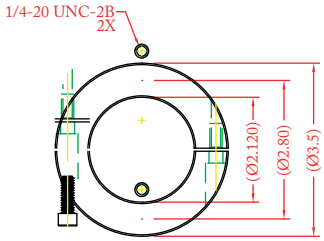

OPTIONAL ACORN NUT

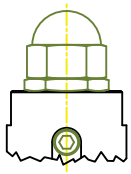

(Part Number: 30-10059 shown above)

***SAE AS5202 supersedes MS33649*

Viton® & Kalrez® are registered trademarks of E.I.duPont de Nemours and Company. Elgiloy® is a registered trademark of Elgiloy Specialty Metals Division, Combined Metals of Chicago LLC (Contact factory for Kalrez® pricing)

***For extended temperature ranges please contact Premier Industries. Above temperature ranges will apply to the majority of media for which the material is recommended. Temperature ranges can vary with some media, ALWAYS TEST UNDER SERVICE CONDITIONS.*

HYDRAULIC HIGH PRESSURE

Pressure Reducing Regulators

6000 SERIES

PART #	1 2	-	3	4	5	6	7	-	8 9	MODS
30-10203		-						-		

1 2	MOUNTING STYLE
MB	Mounting bracket style body
PN	Panel nut style body *(panel nuts included)*

3	OUTLET PRESSURE
0	0-200 PSIG *(0-13.8 Bar)*
1	5-500 PSIG *(0.34-34.5 Bar)*
2	5-800 PSIG *(0.34-55.2 Bar)*
3	10-1500 PSIG *(0.69-103.4 Bar)*
4	15-2500 PSIG *(1.0-172.4 Bar)*
5	25-4000 PSIG *(1.7-275.8 Bar)*
6	50-6000 PSIG *(3.4-413.7 Bar)*
7	100-10000 PSIG *(6.9-689.5 Bar) (stainless steel only)*

4	MAIN VALVE Cv
0	Cv 0.06
1	Cv 0.12
2	Cv 0.20

Vent Valve Cv: 0.06

5	PORTING CONFIG.
A	
C	
L*	
S	

**L porting configurations with 3/8" ports and larger require a larger body diameter*

6	PORT SIZE
4	1/4"
6	3/8"
8	1/2"**
9	9/16"**

***1/2" ports not available in medium pressure*
***9/16" ports only available in medium pressure*

Gauge ports: 1/4" FNPT

7	PORT TYPE *IN/OUT/VENT*
1	NPT
2	SAE J1926
3	SAE AS5202 (MS33649**)
4	MEDIUM PRESSURE
6	NPTF

***SAE AS5202 supersedes MS33649*

8 9	O-RINGS
00	BUNA-N
01	AFLAS®
02	VITON®
05	EPDM
11	KALREZ® *(Contact factory for pricing)*
12	NITRILE, LO-TEMP

MODIFICATIONS *Separate multiple mods with a dash*	
Blank	None
N	NACE MR0175/ ISO 15156-2:2009 compatible option
PTU	Port type uniform
ANT	Acorn nut

10000 PSIG MAX INLET: The end user is responsible to ensure adequate fittings are used to connect regulator to plumbing.

Kalrez® & Viton® are registered trademarks of E.I.duPont de Nemours and Company. Kel-F® is a registered trademark of 3M Company
AFLAS® is a registered trademark of Asahi Glass Co., Ltd
Contact factory for material certifications. Fees may apply.

AIR LOADED HIGH PRESSURE HYDRAULIC
Pressure Reducing Regulators

6000AL SERIES

PREMIER INDUSTRIES

1590 99th Ln NE,
Minneapolis, MN 55449
763-786-4020

MADE IN THE USA
Minneapolis, MN

DESCRIPTION

Premier 6000AL Series regulators are high pressure, hydraulic, piston sensed, pressure reducing regulators with a flow capacity (Cv) of 0.06, 0.12, 0.20, or 0.30 and control pressures up to 10000 PSIG *(689.5 bar)*. This regulator features an air loader with a max inlet pressure of 100 PSIG / 6.89 bar *(regulator 10000 PSIG (689.5 bar) max inlet)*.

The 6000AL regulator's captured venting allows potentially hazardous media to be safely piped away.

FEATURES

- Captured venting *(non-venting mod. available)*
- Flow capacity (Cv): 0.06, 0.12, 0.20, or 0.30
- Piston sensed
- Compatible with electro-pneumatic controllers
- Machined bar stock body eliminates porosity found in castings

The Premier 6000AL Series pressure reducing regulator's design is remarkably flexible.
Contact Premier Industries for a custom Premier 6000AL Series regulator to meet your exact needs.

6000AL SERIES

AIR LOADED HIGH PRESSURE HYDRAULIC

Pressure Reducing Regulators

SPECIFICATIONS

- **MAXIMUM INLET PRESSURE:**
  - REGULATOR: 10000 PSIG *(689.5 bar)*
  - AIR ACTUATOR: 100 PSIG *(6.89 bar)*
- **CONTROL PRESSURE RANGES:**
  - 10-1500 PSIG *(0.69 - 103.42 bar)*
    Diameter: 1.000"
    Area: 0.7854 in²
    *Ratio: 16/1 ***
  - 15-2500 PSIG *(1.03 - 172.37 bar)*
    Diameter: 0.750"
    Area: 0.4418 in²
    *Ratio: 28/1 ***
  - 50-6000 PSIG *(3.45 - 413.69 bar)*
    Diameter: 0.500"
    Area: 0.1964 in²
    *Ratio: 64/1 ***
  - 100-10000 PSIG *(6.89 - 689.5 bar)*
    Diameter: 0.375"
    Area: 0.1104 in²
    *Ratio: 114/1 ***

*** 4.0" diameter diaphragm*
Diaphragm area: 12.5664 in²

- **FLOW (Cv):** 0.06, 0.12, 0.20, or 0.30
- **AMBIENT OPERATING TEMPERATURES:**
  - -4°F/-20°C to 212°F/100°C (Viton®)*
  - -15°F/-26°C to 212°F/100°C (BUNA-N)*

  **lower temperature compounds available upon request*

MATERIALS OF CONSTRUCTION

- **BODY:** 316 Stainless Steel
- **HOUSING, AIR ACTUATOR :**
  - 6061-T6 Aluminum/clear anodized
- **DIAPHRAGM, AIR ACTUATOR :**
  - Neoprene, nylon fabric-reinforced
- **MAIN VALVE STEM:** 17-4 Stainless Steel *(hardened)*
- **MAIN VALVE SEAT:**
  - 17-4 Stainless Steel, hardened *(standard)*
  - Vespel®
- **VENT VALVE SEAT:** Vespel®
- **BACK-UP RINGS:** PTFE & PCTFE
- **ELASTOMER SEALS:**
  - BUNA-N
  - AFLAS®
  - Viton®
  - EPDM
  - Kalrez® *(Contact factory for pricing)*
- **WETTED PARTS:**
  - 316 Stainless Steel
  - 17-4 Stainless Steel

PORTING

- **INLET/OUTLET:**
  - 1/4", 3/8", 1/2" FNPT
  - 1/4", 3/8", 1/2" SAE J1926
  - 1/4", 3/8", 1/2" SAE AS5202 *(MS33649**)*
  - 1/4", 3/8", 9/16" Medium Pressure
  - 1/4", 3/8", High Pressure
  - 1/4", 3/8", 1/2" NPTF
- **AIR ACTUATOR PORT OPTIONS**:
  - 1/4" NPTF
  - 1/8" FNPT
  - 1/4" SAE AS5202
  - 1/4" SAE J19262
- **VENT:** 1/4" *(inlet/outlet port type)*

OPTIONS

- Private Label
- Panel mounting bracket: P/N: 30-10059 *(Ø2.15 panel hole)*
- Surface mounting holes
- NACE MR0175 compatible design
- Non-venting modification

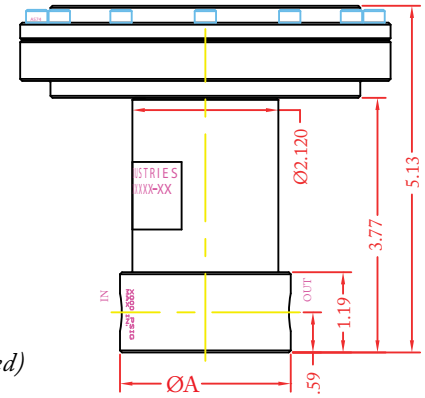

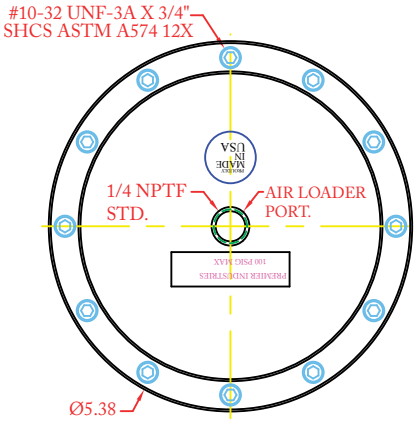

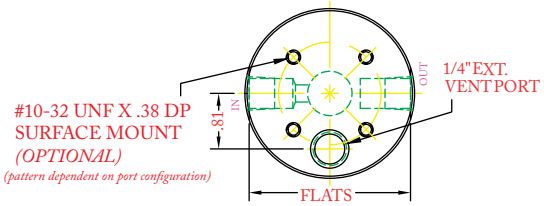

PORT TYPE	ØA	FLATS
NPT	Ø2.48	——
1/4" J1926, M.P., H.P.	Ø2.48	2.36
1/4" AS5202	Ø2.98	2.81
3/8" SAE, M.P., H.P.	Ø2.98	2.81
1/2" SAE	Ø3.23	2.98
9/16" M.P.	Ø3.23	2.98

3/8" & larger 'L' porting configurations require a larger ØA

(Part number 30-10219 shown above)

***SAE AS5202 supersedes MS33649*
Viton® Vespel® and Kalrez® are registered trademarks of E.I.duPont de Nemours and Company
AFLAS® is a registered trademark of the Asahi Glass Co., Ltd.

AIR LOADED HIGH PRESSURE HYDRAULIC

Pressure Reducing Regulators

6000AL SERIES

PART #	-	1	2	3	4	5	-	6 7	MODS
30-10219	-						-		

1	OUTLET PRESSURE	
3	10-1500 psig *(0.69-103.4 bar)*	*Diameter: 1.000"* *Area: 0.7854 in²* *Ratio: 16/1 **
4	15-2500 psig *(1.0-172.4 bar)*	*Diameter: 0.750"* *Area: 0.4418 in²* *Ratio: 28/1 **
6	50-6000 psig *(3.4-413.7 bar)*	*Diameter: 0.500"* *Area: 0.1964 in²* *Ratio: 64/1 **
7	100-10000 psig *(6.9-689.5 bar)* *(stainless steel only)*	*Diameter: 0.375"* *Area: 0.1104 in²* *Ratio: 114/1 **

** 4.0" diameter diaphragm*
Diaphragm area: 12.5664 in²

2	MAIN VALVE Cv
0	Cv 0.06
1	Cv 0.12
2	Cv 0.20
3	Cv 0.30

Vent Valve Cv: 0.06

3	PORTING CONFIG.
A	
L**	
C	
S	

***L porting configurations with 3/8" ports and larger require a larger body diameter*

4	PORT SIZE
4	1/4"
6	3/8"
8	1/2"***
9	9/16"****

****1/2" ports not available in medium pressure*
*****9/16" ports only available in medium pressure*

Gauge ports: 1/4" FNPT

5	PORT TYPE *IN/OUT/VENT*
1	NPT
2	SAE J1926
3	SAE AS5202 *(MS33649**)*
4	MEDIUM PRESSURE
5	HIGH PRESSURE
6	NPTF

***SAE AS5202 supersedes MS33649*

6 7	O-RING MATERIAL
00	BUNA-N
01	AFLAS®
02	VITON®
05	EPDM
11	KALREZ® *(Contact factory for pricing)*

MODIFICATIONS *(Optional)*	
Blank	None
AS	1/4" SAE AS5202 LOADER PORT
E	1/8" NPT AIR LOADER PORT
J	1/4" SAE J1926 LOADER PORT
N	NACE MR0175 COMPATIBLE
SM	SURFACE MOUNT
V	VESPEL® SEAT
NV	NON-VENTING

Separate multiple mods with a dash.
Example:
Surface mount with Vespel® seat: SM-V

10000 PSIG MAX INLET:
The end user is responsible to ensure adequate fittings are used to connect regulator to plumbing.

Kalrez® Vespel® & Viton® are registered trademarks of E.I.duPont de Nemours and Company.

AFLAS® is a registered trademark of Asahi Glass Co., Ltd

Contact factory for material certifications.
Fees may apply.

DOME LOADED HIGH PRESSURE HYDRAULIC

Pressure Reducing Regulators

6000DL SERIES

PREMIER INDUSTRIES

1590 99th Ln NE,
Minneapolis, MN 55449
763-786-4020

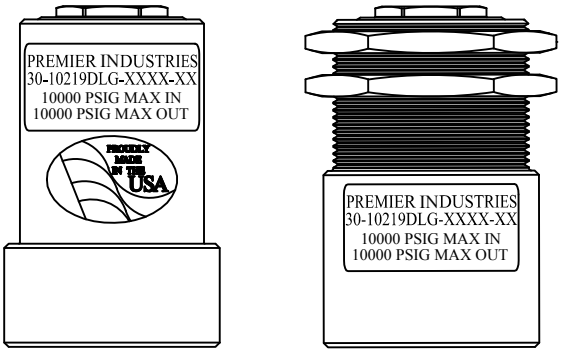

MADE IN THE USA

Minneapolis, MN

DESCRIPTION

Premier 6000DL Series dome loaded, high pressure, hydraulic, pressure reducing regulators: rugged, compact regulators for remotely-controlled high pressure applications. These piston sensed units are rated for inlet and outlet pressures up to 10000 PSIG *(689.5 bar)* and Cv 0.06, 0.12, 0.20, or 0.30.

Premier 3000DL Series regulators are used to regulate a broad range of non-corrosive and corrosive media (based on materials of construction). Captured venting allows fluids/gases to be safely piped away.

FEATURES

- Captured venting
- Dome loaded for remote pressure control
- Compatible with electro-pneumatic controllers
- 17-4 & 316 stainless steel construction for strength and corrosion resistance
- 10000 PSIG *(689.5 bar)* max inlet
- Cv 0.06, 0.12, 0.20, or 0.30
- Economical pricing
- Machined bar stock body, bonnet and piston reduce particle shedding and contamination

The Premier 6000DL Series pressure reducing regulator's design is remarkably flexible.
Contact Premier Industries for a custom 6000DL Series regulator to meet your exact needs.

6000DL SERIES

DOME LOADED HIGH PRESSURE HYDRAULIC

Pressure Reducing Regulators

SPECIFICATIONS

- **MAX INLET PRESSURE:** 10000 PSIG *(689.5 bar)*
- **MAX OUTLET PRESSURE:** 10000 PSIG *(689.5 bar)*
- **MAX DOME LOAD:** 10000 PSIG *(689.5 bar)*
- **DOME TO SENSOR RATIO:** 1:1
- **FLOW (Cv):** 0.06, 0.12, 0.20, 0.30
- **VENT VALVE (Cv):** 0.06
- **OPERATING TEMPERATURE:**
  - -15°F/-26°C to 165°F/74°C (BUNA-N)
  - -4°F/-20°C to 165°F/74°C (VITON®)
  - -65°F/-54°C to 165°F/74°C (EPDM)
  - 15°F/-9°C to 165°F/74°C (AFLAS®)
  - -65°F/-54°C to 165°F/74°C (NITRILE)

MATERIALS OF CONSTRUCTION

- **BODY & BONNET** :
  - 316 Stainless Steel,
- **WETTED PARTS, OTHER**:
  - 316 Stainless Steel,
  - 17-4 Stainless Steel
- **MAIN VALVE SEAT OPTIONS**:
  - 17-4 Stainless Steel
  - Vespel®
- **VENT VALVE SEAT OPTIONS**:
  - 316 Stainless Steel
  - Vespel®
- **MAIN VALVE / VENT VALVE STEM:** 17-4 Stainless Steel
- **O-RING MATERIAL**:
  - BUNA-N
  - AFLAS®
  - Viton®
  - EPDM
  - Kalrez® *(Contact factory for pricing)*
  - Nitrile, Lo-temp
- **BACK-UP RINGS**: PCTFE

PORTING

- **INLET/ OUTLET PORTING OPTIONS**:
  - 1/4", 3/8", 1/2" FNPT
  - 1/4", 1/2", 3/8", SAE J1926
  - 1/4", 1/2", 3/8", SAE AS5202*
  - 1/4", 3/8", 9/16", Medium pressure
  - 1/4", 3/8", 9/16", High pressure
  - 1/4", 3/8", 1/2", NPTF
- **GAUGE PORTS**:
  - 1/4" FNPT
- **DOME PORTS**:
  - 1/4" *(match inlet/outlet/vent type)*
- **VENT PORTS**:
  - 1/4" *(match inlet/outlet/vent type)*

OPTIONS

- Private label
- Panel mounting bracket: *P/N: 30-10059 (Ø2.15 panel hole)*
- Panel mounting nuts: *P/N: 30-10189 (Ø2.28 panel hole)*

PANEL MOUNTING BRACKET STYLE

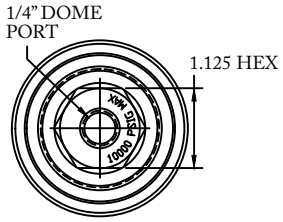

PANEL NUT STYLE

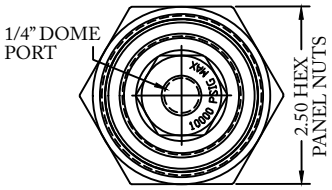

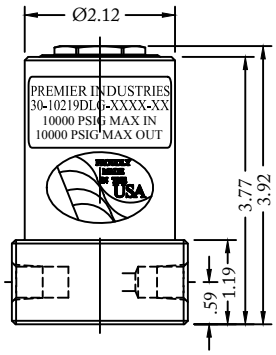

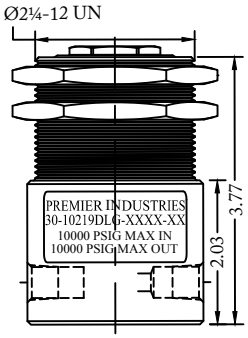

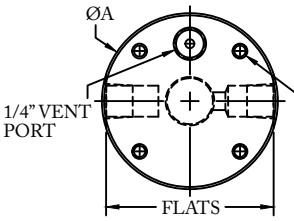

OPTIONAL #10-32 UNF X .38 DP SURFACE MOUNT HOLES
pattern dependent on port type & configuration

(Surface mount not available on panel nut bodies)

(Part number 30-10219DL shown above)

PORT TYPE	ØA	FLATS
NPT, NPTF	Ø2.48	——
1/4" J1926, M.P., H.P.	Ø2.48	2.36
1/4" AS5202	Ø2.98	2.81
3/8" SAE, M.P., H.P.	Ø2.98	2.81
1/2" SAE	Ø3.23	2.98
9/16" M.P.	Ø3.23	2.98

**Bodies w/ 'L' porting configurations and 3/8" ports and larger require a larger ØA*

**SAE AS5202 supersedes MS33649*
Vespel® Kalrez® & Viton® are registered trademarks of E.I.duPont de Nemours and Company
AFLAS® is a registered trademark of the Asahi Glass Co., Ltd.

DOME LOADED HIGH PRESSURE HYDRAULIC

Pressure Reducing Regulators

6000DL SERIES

SERIES	-	1	2	3	4	-	5 6	-	MODS
30-10219DL	-					-		-	

1	MAIN VALVE SEATS & Cv RATING
0	Vespel® Cv 0.06
1	Vespel® Cv 0.12
2	Vespel® Cv 0.20
3	Vespel® Cv 0.30

2	PORTING CONFIG. *(1/4" FNPT)*
A	
L	
C	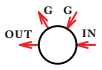
S	

3	PORT SIZE
4	1/4"
6	3/8"
8	1/2"*
9	9/16**

**1/2" not available in medium & high pressure*
***9/16" only available in medium & high pressure*

4	PORT TYPE *(IN/OUT VENT/DOME)*
1	FNPT
2	SAE J1926
3	SAE AS5202*
4	Medium Pressure
5	High Pressure
6	NPTF

5 6	O-RINGS
00	BUNA-N
01	AFLAS®
02	VITON®
05	EPDM
11	KALREZ® *(Contact factory for pricing)*
12	NITRILE, LO-TEMP

MODIFICATIONS *Separate multiple mods with a dash*	
Blank	None
N	NACE MR0175
PN	PANEL NUT STYLE BODY
PTU	PORT TYPE UNIFORM
SM	SURFACE MOUNT *(Not available on panel nut bodies)*

**SAE AS5202 supersedes MS33649*

10000 PSIG MAX INLET
The end user is responsible to ensure adequate fittings are used to connect regulator to plumbing.

Vespel® Kalrez® & Viton® are registered trademarks of E.I.duPont de Nemours and Company
AFLAS® is a registered trademark of the Asahi Glass Co., Ltd

Contact factory for material certifications. Fees may apply.

FLANGE MOUNTED HYDRAULIC HIGH PRESSURE

Pressure Reducing Regulators

6000FL SERIES

PREMIER INDUSTRIES

1590 99th Ln NE,
Minneapolis, MN 55449
763-786-4020

MADE IN THE USA

Minneapolis, MN

DESCRIPTION

Premier 6000FL Series pressure reducing regulators are flange mounted, high pressure, hydraulic, variable pressure & delivery regulators, rated for inlet pressures up to 3000 psig (206.82 bar) and Cv 0.06. Premier 6000FL Series regulators feature captured venting to safely pipe away potentially toxic or corrosive media. Complete with ANSI B16.5 class 1500 forged flanges with a raised face and welded neck.

FEATURES

- Raised face, welded neck flange connections
- 1" nominal pipe size
- Captured venting standard
- Cv 0.06
- Max inlet: 3000 psig / 206.82 bar
- ANSI B16.5 class 1500 forged flange
- Black anodized aluminum knob
- Machined bar stock body, bonnet and piston eliminates porosity found in castings

The Premier 6000FL Series pressure reducing regulator's design is remarkably flexible.
Contact Premier Industries for a custom 6000FL Series regulator to meet your exact needs.

6000FL SERIES

FLANGE MOUNTED HYDRAULIC HIGH PRESSURE

Pressure Reducing Regulators

SPECIFICATIONS

- **MAXIMUM INLET PRESSURE:**
  - 3000 PSIG *(206.84 Bar)*
- **CONTROL PRESSURE RANGES:**
  - 5-500 PSIG *(0.35-34.5 Bar)*
  - 5-800 PSIG *(0.35-55.2 Bar)*
  - 10-1500 PSIG *(0.69-103.4 Bar)*
  - 15-2500 PSIG *(1.0-172.4 Bar)*
- **FLOW CAPACITY**
  - **MAIN VALVE Cv:** 0.06
  - **VENT VALVE Cv:** 0.06
- **OPERATING TEMPERATURE:****
  - -15˚F/-26˚C to 165˚F/74˚C (BUNA-N)
  - -4˚F/-20˚C to 165˚F/74˚C (Viton®)
  - -65˚F/-54˚C to 165˚F/74˚C (EPDM)
  - 0˚F/-17˚C to 165˚F/74˚C (KALREZ®)
  - 15˚F/-9˚C to 165˚F/74˚C (ALFAS)
  - -50˚F/-45˚C to 165˚F/74˚C (Nitrile, Low-temp)
  - -61˚F/-52˚C to 165˚F/74˚C (Nitrile, Low-temp, butadiene)

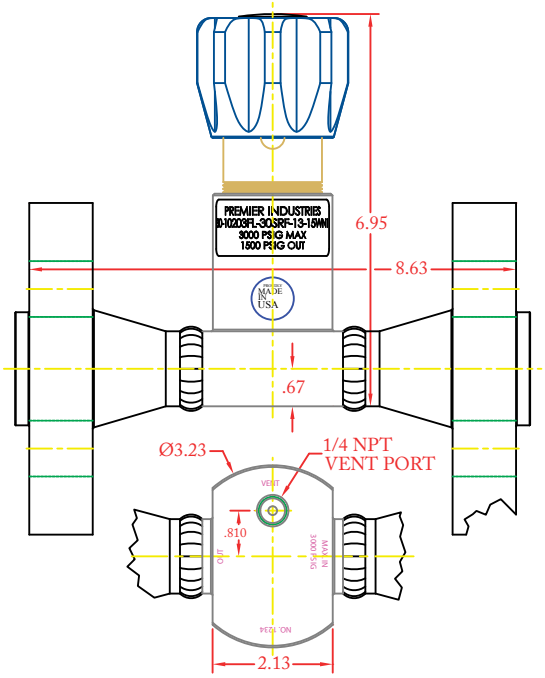

MATERIALS OF CONSTRUCTION

- **BODY & BONNET OPTIONS:**
  - 316 Stainless Steel
  - 17-4 Stainless Steel
- **VALVE SEAT:** 17-4 Stainless Steel, hardened
- **VENT VALVE SEAT:** 316 Stainless Steel
- **WETTED PARTS:** 316 Stainless Steel and 17-4 Stainless Steel
- **O-RING MATERIAL:**
  - Viton®
  - Buna-N
  - EPDM
  - AFLAS
  - Nitrile (Low-Temp)
  - Kalrez® *(Contact factory for pricing)*
  - Nitrile (Low-Temp) - Butadiene
- **BACK-UP RINGS:** PTFE

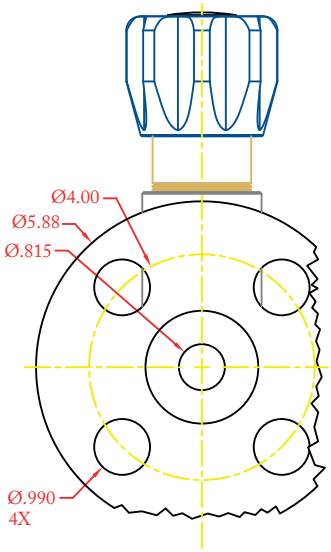

PORTING

- **INLET PORT:**
  - ANSI B16.5 Class 1500 forged flange, 1" nomical pipe size, welded neck and raised face
- **OUTLET PORT:**
  - ANSI B16.5 Class 1500 forged flange, 1" nomical pipe size, welded neck and raised face
- **VENT PORT:**
  - 1/4" FNPT

(Part Number: 30-10203FL)

OPTIONAL ITEMS

- Private label

***For extended temperature ranges please contact Premier Industries. Above temperature ranges will apply to the majority of media for which the material is recommended. Temperature ranges can vary with some media, ALWAYS TEST UNDER SERVICE CONDITIONS.*

FLANGE MOUNTED HYDRAULIC HIGH PRESSURE

Pressure Reducing Regulators

6000FL SERIES

PART #	1 2	-	3	4	5	6 7	-	8 9	-	10 11	12 13	14
30-10203		-					-		-			

1 2	MOUNTING STYLE
FL	Flange mount style body
3	**OUTLET PRESSURE**
1	5-500 PSIG *(0.34-34.5 Bar)*
2	5-800 PSIG *(0.34-55.2 Bar)*
3	10-1500 PSIG *(0.69-103.4 Bar)*
4	15-2500 PSIG *(1.0-172.4 Bar)*
4	**MAIN VALVE Cv**
0	Cv 0.06
	Vent Valve Cv: 0.06
5	**PORTING CONFIGURATION**
S	
6 7	**FLANGE FACE STYLE**
RF	Raised face

8 9	O-RING MATERIALS
00	BUNA-N
01	AFLAS®
02	VITON®
05	EPDM
11	KALREZ® *(Contact factory for pricing)*
12	NITRILE, LO-TEMP
13	NITRILE, LO-TEMP, BUTADIENE
10 11	**ANSI FLANGE CLASS**
15	ANSI class 1500 forged flange
12 13	**FLANGE NECK STYLE**
WN	Welded neck
14	**NOMINAL PIPE SIZE**
1	1" nominal pipe size

Contact factory for material certifications. Fees may apply.

HYDRAULIC HIGH PRESSURE LOW-TORQUE HAND KNOB

Pressure Reducing Regulators

6020 SERIES

PREMIER INDUSTRIES

1590 99th Ln NE,
Minneapolis, MN 55449
763-786-4020

MADE IN THE USA

Minneapolis, MN

DESCRIPTION

The high pressure, hydraulic Premier 6020 Series pressure reducing regulators are single stage, piston sensed, variable delivery, pressure reducing regulators, designed for inlet and outlet pressures up to 10000 PSIG *(689.5 Bar)*, and Cv 0.06, 0.12, 0.2, or 0.3. This regulator features an easily adjusted, ball bearing hand knob for smooth adjustments.

Premier 6020 Series regulators are used to regulate a broad range of non-corrosive and corrosive media (based on materials of construction). Premier 6020 Series regulators can be supplied with a wide range of inlet and outlet configurations.

FEATURES

- Low-torque hand knob
- Captured-venting
- Cv: 0.06, 0.12, 0.2, or 0.3
- Machined bar stock body, bonnet and piston eliminates porosity found in castings
- Economical pricing

The Premier 6020 Series pressure reducing regulator's design is remarkably flexible.
Contact Premier Industries for a custom 6020 Series regulator to meet your exact needs.

6020 SERIES

HYDRAULIC HIGH PRESSURE LOW-TORQUE HAND KNOB

Pressure Reducing Regulators

SPECIFICATIONS

- **MAXIMUM INLET PRESSURE *(SS)* :** 10000 PSIG *(689.5 Bar)*
- **MAXIMUM INLET PRESSURE *(BRASS)* :** 6000 PSIG *(413.7 Bar)*
- **CONTROL PRESSURE RANGES:**
  - 0-200 PSIG *(0-13.8 Bar)*
  - 5-500 PSIG *(0.35-34.5 Bar)*
  - 5-800 *(0.35-55.2 Bar)*
  - 10-1500 PSIG *(0.69-103.4 Bar)*
  - 15-2500 PSIG *(1.0-172.4 Bar)*
  - 25-4000 PSIG *(1.7-275.8 Bar)*
  - 50-6000 PSIG *(3.4-413.7 Bar)*
  - 100-10000 PSIG *(6.9-689.5 Bar)*
- **FLOW (Cv):** 0.06, 0.12, 0.2, or 0.3
- **OPERATING TEMPERATURES:**
  - BUNA-N: -15°F / -26°C* to 165°F / 74°C
  - Viton®: -4°F / -20°C* to 165°F / 74°C
  - EPDM: -65°F / -54°C to 165°F / 74°C

  ** lower temperature compounds are available*

MATERIALS OF CONSTRUCTION

- **BODY** :
  - 316 Stainless Steel
  - SAE 360 Brass
- **BONNET**:
  - 17-4 Stainless Steel
  - SAE 360 Brass
- **OTHER WETTED PARTS**: 316 Stainless Steel
- **O-RING MATERIAL OPTIONS**:
  - Viton®
  - Buna-N
  - EPDM
  - Kalrez® *(contact factory for pricing)*
  - AFLAS®
  - Nitrile, lo-temp
- **BACK-UP RINGS**: PTFE, and PCTFE
- **MAIN VALVE**: 316 Stainless Steel & 17-4 Stainless Steel
- **MAIN VALVE SEAT**: 316 Stainless Steel

PORTING

- **INLET PORTING OPTIONS**:
  - 1/4", 3/8", 1/2" FNPT
  - 1/4", 3/8", 1/2" SAE J1926
  - 1/4", 3/8", 1/2" SAE AS5202 *(MS33649**)*
  - 1/4", 3/8", 9/16" Medium Pressure
- **OUTLET PORTING OPTIONS**:
  - 1/4", 3/8", 1/2" FNPT
  - 1/4", 3/8", 1/2" SAE J1926
  - 1/4", 3/8", 1/2" SAE AS5202 *(MS33649**)*
  - 1/4", 3/8", 9/16" Medium Pressure

OPTIONS

- Gauges
- Captured venting
- Private label
- Panel mounting bracket: *P/N: 30-10059 (Ø2.15 panel hole)*

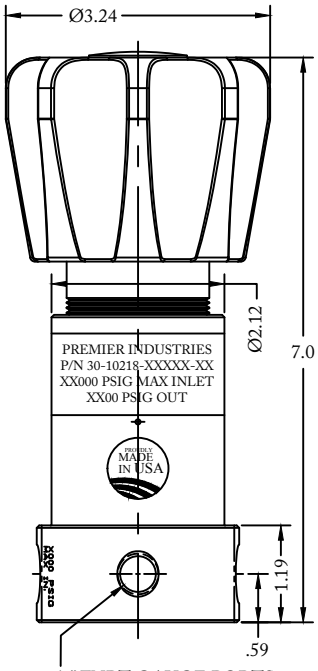

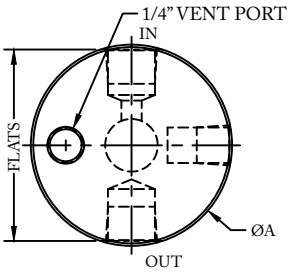

(Part Number: 30-10218C)

PORT TYPE	ØA	FLATS
NPT, NPTF	Ø2.48	——
1/4" M.P.	Ø2.48	2.36
1/4" & 3/8" SAE	Ø2.98	2.81
3/8" M.P.	Ø2.98	2.81
1/2" SAE	Ø3.23	2.98
9/16" M.P.	Ø3.23	2.98

*** SAE AS5202 supersedes MS33649*

Vespel® Kalrez® & Viton® are registered trademarks of E.I.duPont de Nemours and Company
Aflas® is a registered trademark of the Asahi Glass Co., Ltd.

HYDRAULIC HIGH PRESSURE LOW-TORQUE HAND KNOB

Pressure Reducing Regulators

6020 SERIES

SERIES	-	1	2	3	4	5	-	6 7	8	-	MODS
30-10218C	-						-			-	

1	BODY/BONNET MATERIALS *(MAX. INLET PRESSURE)*
1	SAE 360 Brass Body & Bonnet *(6000 PSIG / 413.7 Bar)*
2	316SS Body, 17-4SS Bonnet *(10000 PSIG / 689.5 Bar)*

2	OUTLET PRESSURE
0	0-200 PSIG *(0-13.8 Bar)*
1	5-500 PSIG *(0.34-34.5 Bar)*
2	5-800 PSIG *(0.34-55.2 Bar)*
3	10-1500 PSIG *(0.69-103.4 Bar)*
4	15-2500 PSIG *(1.0-172.4 Bar)*
5	25-4000 PSIG *(1.7-275.8 Bar)*
6	50-6000 PSIG *(3.4-413.7 Bar)*
7	100-10000 PSIG *(6.9-689.5 Bar) (stainless steel only)*

3	FLOW (Cv)
0	Cv 0.06
1	Cv 0.12
2	Cv 0.2
3	Cv 0.3

4	PORT SIZE *Gauge ports 1/4" FNPT*
4	1/4"
6	3/8"
8	1/2"*
9	9/16"**

**1/2" not available in medium pressure*
***9/16" only available in medium pressure.*

5	PORT TYPE
1	FNPT
2	SAE J1926
3	SAE AS5202 *(MS33649**)*
4	Medium Pressure

6 7	O-RINGS
00	BUNA-N
01	AFLAS
02	VITON®
05	EPDM
11	KALREZ® *(contact factory for pricing)*
12	NITRILE, LO-TEMP

8	PORT CONFIGURATION
A	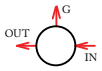
C	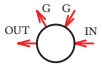
L	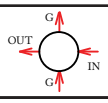
S	

MODIFICATIONS

Separate multiple mods with a dash

Blank	none
SM	surface mount*
PTU	port type uniform

**Surface mount: pattern dependent on port type, size, and configuration*

***SAE AS5202 supersedes MS33649*

10000 PSIG MAX INLET
The end user is responsible to ensure adequate fittings are used to connect regulator to plumbing.

Kalrez® & Viton® are registered trademarks of E.I.duPont de Nemours and Company
AFLAS® is a registered trademark of the Asahi Glass Co., Ltd.

Contact factory for material certifications. Fees may apply.

HIGH PRESSURE HYDRAULIC 15000 PSIG

Pressure Reducing Regulators

6023 SERIES

PREMIER INDUSTRIES

1590 99th Ln NE,
Minneapolis, MN 55449
763-786-4020

MADE IN THE USA

Minneapolis, MN

DESCRIPTION

The high pressure, hydraulic Premier 3023 Series pressure reducing regulators are single stage, piston sensed, variable delivery, pressure reducing regulators, designed for inlet and outlet pressures up to 15000 PSIG *(1034.21 bar)* and Cv 0.06 or 0.12.

Premier 3023 Series regulators are used to regulate a broad range of non-corrosive and corrosive media (based on materials of construction). The regulator's captured venting allows fluids/gases to be safely piped away. Premier 3023 Series regulators can be supplied with a wide range of inlet and outlet configurations.

FEATURES

- Captured venting
- 15000 PSIG *(1034.21 bar)* MAX
- Cv 0.06 or 0.12
- Optional ball-bearing loader
- Optional tamper resistant acorn nut
- Optional threaded panel mounting nut or panel mounting bracket style body
- Economical pricing
- Machined bar stock body, bonnet and piston eliminates porosity found in castings

The Premier 6023 Series pressure reducing regulator's design is remarkably flexible. Contact Premier Industries for a custom 6023 Series regulator to meet your exact needs.

6023 SERIES

HIGH PRESSURE HYDRAULIC 15000 PSIG

Pressure Reducing Regulators

SPECIFICATIONS

- **MAX INLET PRESSURE (SS):** 15000 PSIG *(1034.21 bar)*
- **CONTROL PRESSURE RANGES:**
  - 5-500 PSIG *(0.34 - 34.47 bar)*,
  - 5-1000 PSIG *(0.34 - 68.95 bar)*,
  - 10-1500 PSIG *(0.69 - 103.42 bar)*,
  - 15-2500 PSIG *(1.03 - 172.37 bar)*,
  - 25-4000 PSIG *(1.72 - 275.79 bar)*,
  - 50-6000 PSIG *(3.45 - 413.69 bar)*,
  - 100-10000 PSIG *(6.89 - 689.48 bar)*,
  - 300-15000 PSIG *(20.68 - 1034.21 bar)*
- **FLOW (Cv):** 0.06 or 0.12
- **OPERATING TEMPERATURE:**
  - -15°F/-26°C to 165°F/74°C (BUNA-N)
  - -4°F/-20°C to 165°F/74°C (VITON®)
  - -65°F/-54°C to 165°F/74°C (EPDM)
  - 15°F/-9°C to 165°F/74°C (AFLAS®)
  - -65°F/-54°C to 165°F/74°C (NITRILE)

MATERIALS OF CONSTRUCTION

- **BODY** : 316 Stainless Steel,
- **BONNET**: 17-4 Stainless Steel
- **WETTED PARTS, OTHER**:
  - 316 Stainless Steel,
  - 17-4 Stainless Steel
- **BACK-UP RINGS**: PTFE, PCTFE
- **MAIN VALVE SEAT**:
  - 17-4 Stainless Steel
  - Vespel®
- **MAIN/VENT VALVE STEM**:
  - 17-4 Stainless Steel
- **VENT VALVE SEAT**:
  - Vespel®
  - 316 Stainless Steel

PORTING

- **INLET/OUTLET/**
  - 1/4" FNPT *(standard)*, medium pressure, high pressure
  - 3/8" FNPT, medium pressure, high pressure
  - 9/16" medium pressure
- **VENT PORTING**:
  - 1/4" FNPT *(standard)*
  - 1/4" Medium pressure
  - 1/4" High pressure
- **GAUGE PORTS:** 1/4" FNPT

OPTIONS

- Gauges
- Private label
- Panel mounting bracket: *P/N: 30-10059 (Ø2.15 panel hole)*
- Panel mounting nuts: *P/N: 30-10189 (Ø2.28 panel hole)*

PANEL NUT STYLE

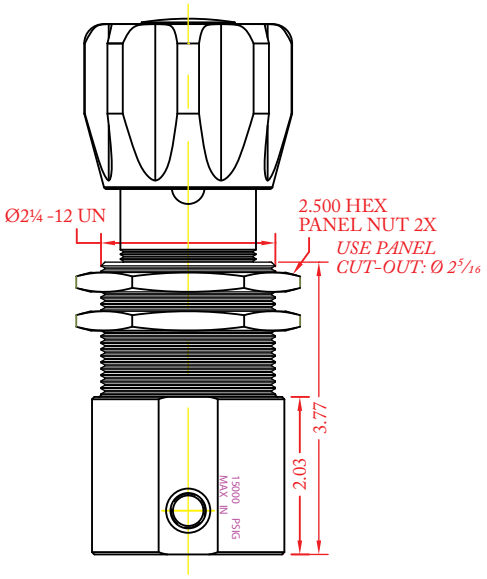

PORT TYPE	ØA	FLATS
NPT	Ø2.48	——
1/4" OTHER	Ø2.48	2.36
3/8" M.P.	Ø2.98	2.81
3/8" H.P	Ø3.23	2.98
9/16" M.P.	Ø3.23	2.98

3/8" and larger 'L' and 'E' porting configurations require a larger ØA

PANEL MOUNTING BRACKET STYLE

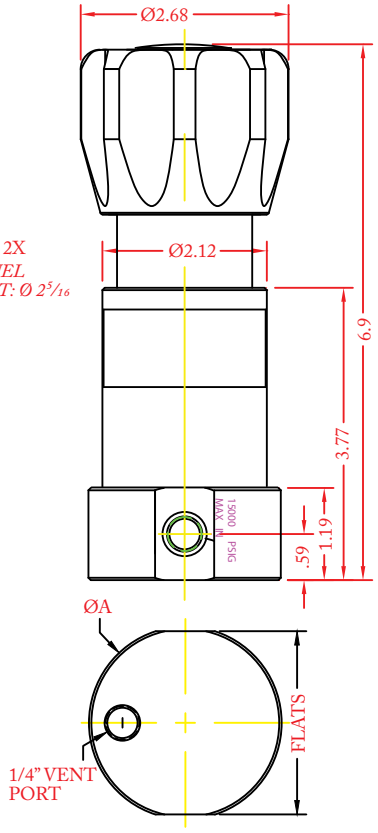

(Part number 30-10213 shown above)

TAMPER RESISTANT ACORN NUT *(optional)*

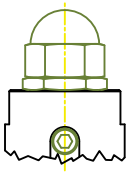

PANEL MOUNTING BRACKET *(optional)*

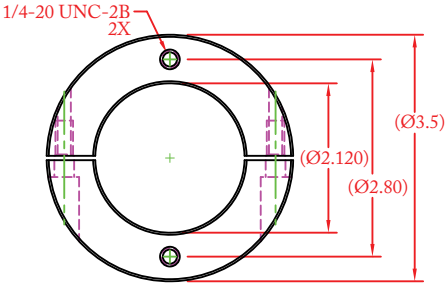

BALL BEARING LOADER *(optional)*

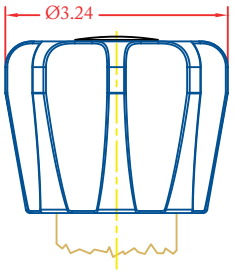

Vespel® & Viton® are registered trademarks of E.I.duPont de Nemours and Company
AFLAS® is a registered trademark of Asahi Glass Co., Ltd

HIGH PRESSURE HYDRAULIC 15000 PSIG

Pressure Reducing Regulators

6023 SERIES

PART #	1 2	-	3	4	5	6	-	7 8	9	-	MODS
30-10213		-					-			-	

1 2	MOUNTING STYLE
MB	Mounting bracket style body
PN	Panel nut style body

3	OUTLET PRESSURE
1	5-500 PSIG *(0.34-34.5 Bar)*
2	5-1000 PSIG *(0.34-68.95 Bar)*
3	10-1500 PSIG *(0.69-103.4 Bar)*
4	15-2500 PSIG *(1.0-172.4 Bar)*
5	25-4000 PSIG *(1.7-275.8 Bar)*
6	50-6000 PSIG *(3.4-413.7 Bar)*
7	100-10000 PSIG *(6.9-689.5 Bar)*
8	300-15000 PSIG *(20.68-1,034.21 Bar)*

4	PORTING CONFIG.
A	
L*	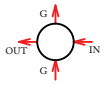
C	
S	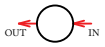
E*	

**L and E porting configurations w/ 3/8" ports and larger require a larger body diameter*

5	PORT SIZE
4	1/4"
6	3/8"
9	9/16" *(only available in medium pressure)*

6	PORT TYPE *IN/OUT/VENT*
1	FNPT
4	MEDIUM PRESSURE
5	HIGH PRESSURE

Gauge ports: 1/4" NPT

7 8	O-RINGS
00	BUNA-N
01	AFLAS®
02	VITON®
05	EPDM
11	KALREZ® *(Contact factory for pricinmg)*
12	NITRILE, LO-TEMP

9	Cv MAIN VALVE *(VALVE SEAT MATERIAL)*
0	Cv 0.06 *(Vespel®)*
1	Cv 0.12 *(Vespel®)*
5	Cv 0.06 *(17-4 Stainless Steel)*
6	Cv 0.12 *(17-4 Stainless Steel)*

MODIFICATIONS *Separate multiple mods with a dash*	
Blank	None
BBL	Ball-bearing loader
ANT	Acorn nut

15000 PSIG MAX INLET: The end user is responsible to ensure adequate fittings are used to connect regulator to plumbing.

Kalrez® & Viton® are registered trademarks of E.I.duPont de Nemours and Company. AFLAS® is a registered trademark of Asahi Glass Co., Ltd

Contact factory for material certifications. Fees may apply.

HIGH PRESSURE, 15000 PSIG HYDRAULIC AIR LOADED

Pressure Reducing Regulators

6023AL SERIES

PREMIER INDUSTRIES

1590 99th Ln NE,
Minneapolis, MN 55449
763-786-4020

MADE IN THE USA

Minneapolis, MN

DESCRIPTION

The high pressure, hydraulic, air loaded, Premier 6023AL Series pressure reducing regulators are single stage, piston sensed, pressure reducing regulators, designed for inlet and outlet pressures up to 15000 PSIG *(1034.21 bar)* and Cv 0.06, 0.12, or 0.20.

Premier 6023AL Series Regulators are designed for compatibility with electro-pneumatic controllers, enabling piloted pressure control from an inert gas at low pressures *(100 psig / 6.89 bar max air load)*.

Premier 6023AL Series regulators are used to regulate a broad range of non-corrosive and corrosive media (based on materials of construction). Captured venting is standard.

FEATURES

- Compatible with electro-pneumatic controllers
- 15000 PSIG *(1034.21 bar)* max
- Captured venting
- Cv 0.06, 0.12, 0.20
- Numerous optional features
- Economical pricing
- Machined bar stock body, bonnet and piston eliminates porosity found in castings

The Premier 6023AL Series pressure reducing regulator's design is remarkably flexible. Contact Premier Industries for a custom 6023AL Series regulator to meet your exact needs.

6023AL SERIES

HIGH PRESSURE, 15000 PSIG HYDRAULIC AIR LOADED

Pressure Reducing Regulators

SPECIFICATIONS

- **MAX INLET PRESSURE:**
  - REGULATOR: 15000 PSIG / 1034.21 bar *(stainless steel)*
  - AIR ACTUATOR: 100 PSIG (*6.89 bar)*
- **CONTROL PRESSURE RANGES:**
  - 10-1500 PSIG *(0.69 - 103.42 bar)*
    Diameter: 1.000"
    Area: 0.7854 in²
    Ratio: 16/1 **
  - 15-2500 PSIG *(1.03 - 172.37 bar)*
    Diameter: 0.750"
    Area: 0.4418 in²
    Ratio: 28/1 **
  - 50-6000 PSIG *(3.45 - 413.69 bar)*
    Diameter: 0.500"
    Area: 0.1964 in²
    Ratio: 64/1 **
  - 100-10000 PSIG *(6.89 - 689.5 bar)*
    Diameter: 0.375"
    Area: 0.1104 in²
    Ratio: 114/1 **
  - 300-15000 PSIG *(20.68 - 1034.21 bar)*
    Diameter: 0.312"
    Area: 0.0765 in²
    Ratio: 164/1 **

*** 4.0" diameter diaphragm*
Diaphragm area: 12.5664 in²

- **FLOW (Cv):** 0.06, 0.12, 0.20
- **VENT VALVE Cv:** 0.06
- **OPERATING TEMPERATURE:**
  - -15°F/-26°C to 212°F/100°C (BUNA-N)
  - -4°F/-20°C to 212°F/100°C (VITON®)
  - -65°F/-54°C to 212°F/100°C (EPDM)
  - 15°F/-9°C to 212°F/100°C (AFLAS)

MATERIALS OF CONSTRUCTION

- **BODY**:
  - 316 Stainless Steel
- **HOUSING, AIR ACTUATOR**:
  - 6061-T6 Aluminum, Clear Anodized
- **DIAPHRAGM, AIR ACTUATOR**:
  - Neoprene, nylon reinforced
- **WETTED PARTS, OTHER**:
  - 316 Stainless Steel
  - 17-4 Stainless Steel
- **BACK-UP RINGS**: PTFE, PCTFE
- **MAIN VALVE SEAT/VENT VALVE SEAT OPTIONS**:
  - 17-4 Stainless Steel, hardened *(standard)*
  - Vespel®
- **MAIN/VENT VALVE STEM**:
  - 17-4 Stainless Steel, hardened

PORTING

- **INLET/OUTLET PORTING OPTIONS**:
  - 1/4", 3/8" FNPT *(standard)*
  - 1/4", 3/8", 9/16" Medium Pressure
  - 1/4", 3/8" High Pressure
- **VENT PORT:** 1/4" inlet/outlet port type
- **LOAD PORT:**
  - 1/4" NPT *(standard)*
  - 1/4" SAE AS5202
  - 1/4" SAE J1926
  - 1/8" NPT

OPTIONS

- Gauges
- Private label
- Panel mounting bracket: *P/N: 30-10059 (Ø2.15 panel hole)*

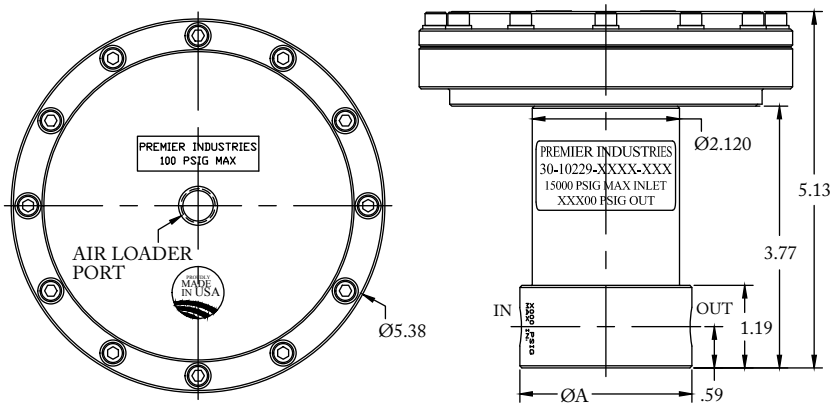

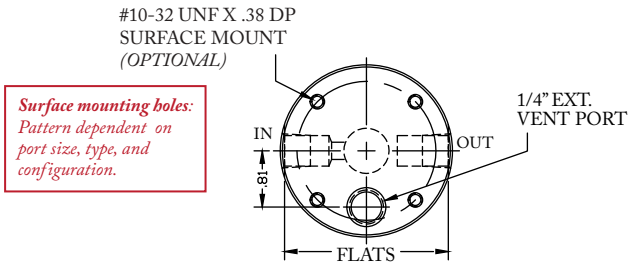

Surface mounting holes: *Pattern dependent on port size, type, and configuration.*

(Part number: 30-10229 shown above)

PORT TYPE	ØA	FLATS
NPT	Ø2.48	——
1/4" OTHER	Ø2.48	2.36
3/8" M.P.	Ø2.98	2.81
1/2" H.P.	Ø3.23	2.98
9/16" M.P.	Ø3.23	2.98

Vespel® Kalrez® & Viton® are registered trademarks of E.I.duPont de Nemours and Company
AFLAS® is a registered trademark of the Asahi Glass Co., Ltd

HIGH PRESSURE, 15000 PSIG HYDRAULIC AIR LOADED

Pressure Reducing Regulators

6023AL SERIES

PART #	-	1	2	3	4	-	5 6	7	-	MODS
30-10229	-					-			-	

1	OUTLET PRESSURE	
3	10-1500 PSIG *0.69-103.4 Bar*	***Diameter:*** *1.000"* ***Area:*** *0.7854 in²* ***Ratio:*** *16/1* **
4	15-2500 PSIG *1.0-172.4 Bar*	***Diameter:*** *0.750"* ***Area:*** *0.4418 in²* ***Ratio:*** *28/1* **
6	50-6000 PSIG *3.4-413.7 Bar*	***Diameter:*** *0.500"* ***Area:*** *0.1964 in²* ***Ratio:*** *64/1* **
7	100-10000 PSIG *6.9-689.5 Bar* *(stainless steel only)*	***Diameter:*** *0.375"* ***Area:*** *0.1104 in²* ***Ratio:*** *114/1* **
8	300-15000 PSIG *20.68-1034.21 Bar* *(stainless steel only)*	***Diameter:*** *0.312"* ***Area:*** *0.0765 in²* ***Ratio:*** *164/1* **

*** 4.0" diameter diaphragm*
Diaphragm area: 12.5664 in²

2	PORTING CONFIGURATION
A	
L	
C	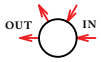
S	
E	
3	**PORT SIZE**
4	1/4"
6	3/8"
9	9/16"** *(Only available in medium pressure)*
4	**PORT TYPE** *(1/4" vent port)*
1	FNPT
4	Medium Pressure
5	High Pressure

5 6	O-RINGS
00	BUNA-N
01	AFLAS®
02	VITON-A®
05	EPDM
11	KALREZ® *(contact factory for pricing)*
7	**Cv MAIN VALVE** *(Valve seat material)*
0	Cv 0.06 *(VESPEL®)*
1	Cv 0.12 *(VESPEL®)*
5	Cv 0.06 *(17-4 STAINLESS STEEL)*
6	Cv 0.12 *(17-4 STAINLESS STEEL)*
7	Cv 0.20 *(17-4 STAINLESS STEEL)*

MODIFICATIONS

Separate multiple mods with a dash

BLANK	None
AS	1/4" SAE AS5202 LOADER PORT
E	1/8" NPT AIR LOADER PORT
J	1/4" SAE J1926 LOADERPORT
SM	SURFACE MOUNT

15000 PSIG MAX INLET

The end user is responsible to ensure adequate fittings are used to connect regulator to plumbing.

Vespel® Kalrez® & Viton® are registered trademarks of E.I.duPont de Nemours and Company
AFLAS® is a registered trademark of the Asahi Glass Co., Ltd

Contact factory for material certifications. Fees may apply.

DOME LOADED HIGH PRESSURE, HYDRAULIC 15000 PSIG

Pressure Reducing Regulators

6023DL SERIES

PREMIER INDUSTRIES

1590 99th Ln NE,
Minneapolis, MN 55449
763-786-4020

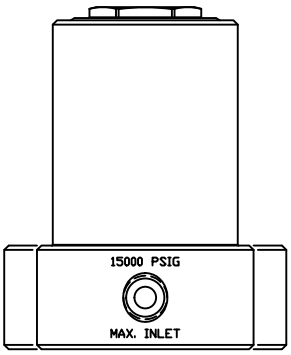

MADE IN THE USA

Minneapolis, MN

DESCRIPTION

Premier 6023DL Series pressure reducing regulators are dome loaded, hydraulic, high pressure, piston sensed, pressure reducing regulators, designed for inlet pressures up to 15000 PSIG *(1034.21 bar)* and Cv 0.06, 0.12, or 0.2. Captured venting allows fluids/gases to be safely piped away.

FEATURES

- Captured venting
- 15000 PSIG *(1034.21 bar)* max inlet
- Outlet pressures up to 15000 PSIG
- 1:1 load ratio
- Piston: Ø1.125
- Cv 0.06, 0.12, or 0.2.
- Machined bar stock body, bonnet and piston eliminates porosity found in castings

The Premier 6023DL Series pressure reducing regulator's design is remarkably flexible.
Contact Premier Industries for a custom 6023DL Series regulator to meet your exact needs.

6023DL SERIES

DOME LOADED HIGH PRESSURE, HYDRAULIC 15000 PSIG

Pressure Reducing Regulators

SPECIFICATIONS

- **MAX INLET PRESSURE:** 15000 PSIG *(1034.21 bar)*
- **MAX OUTLET PRESSURE:** 15000 PSIG *(1034.21 bar)*
- **MAX DOME LOAD:** 15000 PSIG *(1034.21 bar)*
- **FLOW (Cv):** 0.06, 0.12, 0.20
- **VENT VALVE (Cv):** 0.06
- **OPERATING TEMPERATURE:**
  - -15°F/-26°C to 165°F/74°C (BUNA-N)
  - -4°F/-20°C to 165°F/74°C (VITON®)
  - -65°F/-54°C to 165°F/74°C (EPDM)

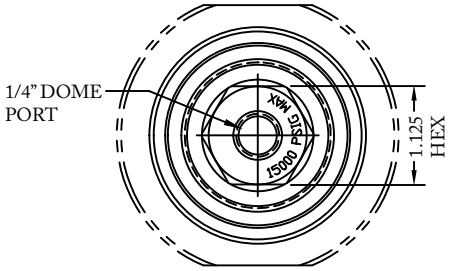

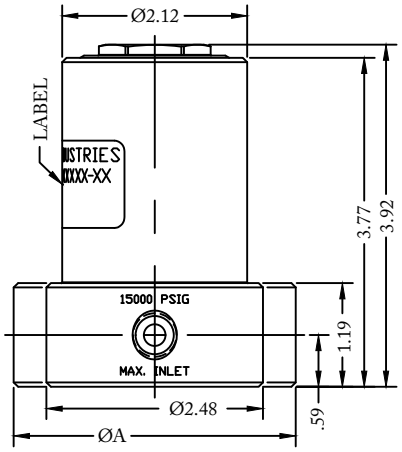

MATERIALS OF CONSTRUCTION

- **BODY**: 316 Stainless Steel
- **MAIN VALVE SEAT**:
  - 17-4 stainless steel *(standard)* -
  - Vespel® *(optional)*
- **VENT VALVE SEAT**:
  - 17-4 stainless steel *(standard)* -
  - Vespel® *(optional)*
- **MAIN VALVE / VENT VALVE STEM:**
  - 17-4 Stainless Steel (hardened)
- **O-RING MATERIAL**:
  - BUNA-N
  - AFLAS®
  - Viton-A®
  - EPDM
  - Kalrez® *(Contact factory for pricing)*
- **BACK-UP RINGS**: PCTFE
- **WETTED PARTS, OTHER**:
  - 316 Stainless Steel,
  - 17-4 Stainless Steel

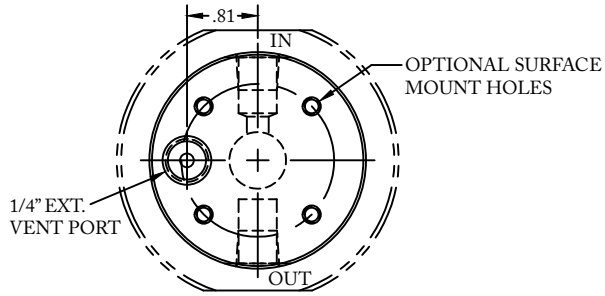

PORTING

- **INLET PORTING**:
  - 1/4", 3/8", 1/2" FNPT
  - 1/4", 3/8", 9/16" MEDIUM PRESSURE
  - 1/4", 3/8", HIGH PRESSURE
- **OPTIONAL GAUGE PORT:** 1/4" FNPT

PORT TYPE	ØA	FLATS
NPT	Ø2.48	——
1/4" M.P. & H.P.	Ø2.48	2.36
3/8" M.P. & H.P.	Ø2.98	2.81
9/16" M.P.	Ø3.23	2.98

3/8" & larger "L" configuration bodies require a larger ØA

OPTIONS

- Private label
- Panel mounting bracket *(P/N: 30-10059)*
- Surface mount
- Port type uniform

(Part number 30-10229DL shown above)

Vespel® Kalrez® & Viton-A® are registered trademarks of E.I.duPont de Nemours and Company
AFLAS® is a registered trademark of the Asahi Glass Co., Ltd.

DOME LOADED HIGH PRESSURE, HYDRAULIC 15000 PSIG

Pressure Reducing Regulators

6023DL SERIES

SERIES	-	1	2	3	4	5	-	7 8	-	MODS
30-10229DL	-						-		-	

1	MAX OUTLET PRESSURE
8	15000 PSIG
2	**Cv : MAIN VALVE/ VALVE SEAT MATERIAL**
0	Cv 0.06 / Vespel® SP-1
1	Cv 0.12 / Vespel® SP-1
2	Cv 0.20 / Vespel® SCP-5000
5	Cv 0.06 / 17-4 stainless steel
6	Cv 0.12 / 17-4 stainless steel
7	Cv 0.20 / 17-4 stainless steel
3	**PORTING CONFIG.**
A	
L	
C	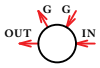
S	

Optional gauge ports: 1/4" FNPT (standard)
Dome port: 1/4" IN/OUT/VENT type

4	PORT SIZE
4	1/4"
6	3/8"
8	1/2"*
9	9/16"**

**1/2" not available in M.P. & H.P.*
***9/16" only available in M.P.*

5	PORT TYPE *(IN, OUT, VENT, DOME)*
1	FNPT
4	Medium Pressure
5	High Pressure

6 7	O-RINGS
00	BUNA-N
01	AFLAS®
02	VITON®
05	EPDM
11	KALREZ® *(Contact factory for pricing)*

MODIFICATIONS	
Blank	None
PTU	PORT TYPE UNIFORM
SM	SURFACE MOUNT

15000 PSIG MAX INLET

The end user is responsible to ensure adequate fittings are used to connect regulator to plumbing.

Vespel® Kalrez® & Viton® are registered trademarks of E.I.duPont de Nemours and Company
AFLAS® is a registered trademark of the Asahi Glass Co., Ltd

Contact factory for material certifications. Fees may apply.

HIGH PRESSURE HYDRAULIC 20000 PSIG

Pressure Reducing Regulators

6025 SERIES

PREMIER INDUSTRIES

1590 99th Ln NE,
Minneapolis, MN 55449
763-786-4020

MADE IN THE USA

Minneapolis, MN

DESCRIPTION

Premier 6025 Series hydraulic, high pressure, pressure reducing regulators are single stage, piston sensed regulators rated for inlet and outlet pressures up to 20000 PSIG *(1378.95 bar)*, and Cv 0.06, 0.12, or 0.20. Premier 6025 series hydraulic regulators feature a hardened stainless steel seat. Captured venting allows media to be safely piped away.

FEATURES

- Rated for pressures up to 20000 PSIG *(1378.95 bar)*
- Flow capacity (Cv): 0.06, 0.12, or 0.20
- Durable hardened stainless steel seat
- Captured venting
- Very competitive pricing
- Machined bar stock body, bonnet and piston eliminates porosity found in castings

The Premier 6025 Series pressure reducing regulator's design is remarkably flexible.
Contact Premier Industries for a custom 6025 Series regulator to meet your exact needs.

6025 SERIES

HIGH PRESSURE HYDRAULIC 20000 PSIG

Pressure Reducing Regulators

SPECIFICATIONS

- **MAXIMUM INLET PRESSURE:** 20000 PSIG *(1378.95 bar)*
- **CONTROL PRESSURE RANGE:**
  - 100-10000 PSIG *(6.89 - 689.48 bar)*
  - 300-15000 PSIG *(20.68 - 1034.21 bar)*
  - 500-20000 PSIG *(34.47 - 1378.95 bar)*
- **FLOW (Cv):** 0.06, 0.12 or 0.20
- **OPERATING TEMPERATURE:**
  - -15˚F/-26˚C to 165˚F/74˚C (BUNA-N)
  - -4˚F/-20˚C to 165˚F/74˚C (VITON®)
  - -65˚F/-54˚C to 165˚F/74˚C (EPDM)

  ***lower temperature compounds available upon request*

MATERIALS OF CONSTRUCTION

- **BODY** :
  - 17-4 Stainless Steel,
- **BONNET**:
  - 17-4 Stainless Steel
- **WETTED PARTS, OTHER**:
  - 316 Stainless Steel
  - 17-4 Stainless Steel
- **O-RINGS:**
  - Buna-N
  - Aflas®
  - Viton®
  - EPDM
  - Kalrez® *(Contact factory for pricing)*
- **BACK-UP RINGS**: PCTFE & PEEK
- **VALVES**:
  - 17-4 Stainless Steel, Hardened
- **VALVE SEAT**:
  - 17-4 Stainless Steel, Hardened

PORTING

- **INLET PORTING**:
  - 1/4" Medium pressure, high pressure
  - 3/8" Medium pressure, high pressure
- **OUTLET PORTING**:
  - 1/4" Medium pressure, high pressure
  - 3/8" Medium pressure, high pressure
- **VENT PORT**:
  - 1/4" inlet/outlet port type
- **OPTIONAL GAUGE PORT**
  - 1/4" FNPT *(standard)*

OPTIONAL ITEMS

- Private label
- Panel mounting nuts
- Panel mounting bracket: *P/N: 30-10500 (2.53 in panel hole)*

PANEL NUT STYLE BODY

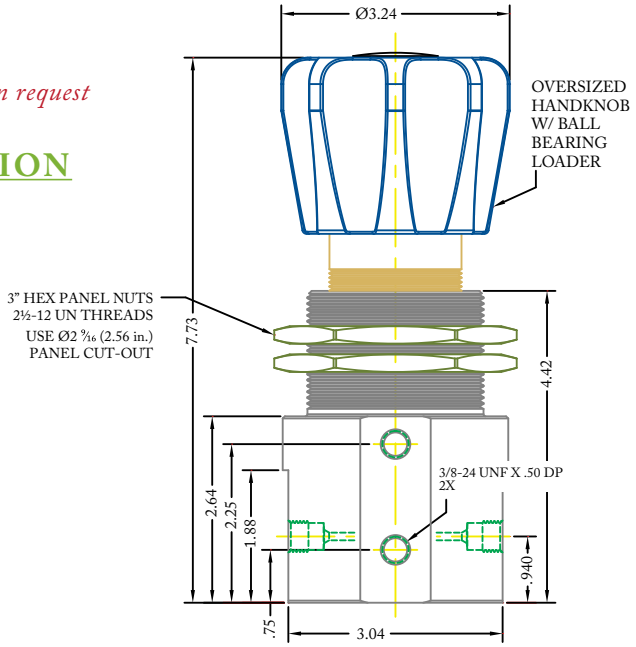

MOUNTING BRACKET STYLE BODY

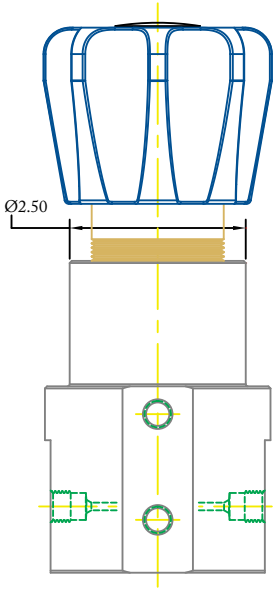

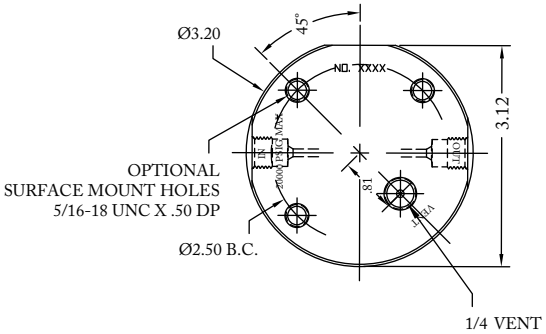

(Part number shown above: 30-10215)

Kalrez® & Viton® are registered trademarks of E.I.duPont de Nemours and Company
AFLAS® is a registered trademark of the Asahi Glass Co., Ltd.

HIGH PRESSURE HYDRAULIC 20000 PSIG

Pressure Reducing Regulators

6025 SERIES

PART #	1 2	-	3	4	5	6	7	-	8 9	-	MODS
30-10215		-						-		-	

1 2	BODY STYLE
MB	Mounting bracket style body
PN	Panel nut style body *(Panel nuts included)*

3	OUTLET PRESSURE
7	100 - 10000 psig *(6.89 - 689.48 bar)*
8	300 - 15000 psig *(20.68-1034.21 bar)*
9	500 - 20000 psig *(34.47-1378.95 bar)*

4	FLOW (Cv)
0	Cv: 0.06
1	Cv: 0.12
2	Cv: 0.20

5	PORTING CONFIGURATION
B	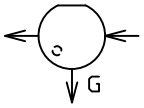
S	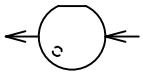

6	PORT SIZE
4	1/4”
6	3/8”

Vent port: 1/4” inlet/outlet port type
Gauge port: 1/4” FNPT standard

7	PORT TYPE *(IN/OUT/VENT)*
4	Medium pressure
5	High pressure

8 9	O-RING MATERIAL
00	BUNA-N
01	AFLAS®
02	VITON®
05	EPDM
11	KALREZ® *(Contact factory for pricing)*

MODIFICATIONS	
BLANK	None
PTU	PORT TYPE UNIFORM
SM	SURFACE MOUNT

20000 PSIG MAX INLET (stainless steel) 6000 PSIG MAX INLET (brass)
The end user is responsible to ensure adequate fittings are used to connect regulator to plumbing.

Kalrez® & Viton® are registered trademarks of E.I.duPont de Nemours and Company
AFLAS® is a registered trademark of the Asahi Glass Co., Ltd.

Contact factory for material certifications. Fees may apply.

AIR LOADED HIGH PRESSURE, 20K HYDRAULIC

Pressure Reducing Regulators

6025AL SERIES

PREMIER INDUSTRIES

1590 99th Ln NE,
Minneapolis, MN 55449
763-786-4020

MADE IN THE USA

Minneapolis, MN

DESCRIPTION

Premier 6025AL Series air loaded, hydraulic, high pressure, pressure reducing regulators are piston sensed, single staged, pressure reducing regulators rated for inlet and outlet pressures up to 20000 PSIG *(1378.95 bar)*, and Cv 0.06, 0.12, or 0.30. Premier 6025AL series hydraulic regulators feature a hardened stainless steel seat. Captured venting allows media to be safely piped away.

FEATURES

- Rated for pressures up to 20000 PSIG *(1378.95 bar)*
- Compatible with electro pneumatic controllers
- Flow capacity (Cv): 0.06, 0.12, or 0.30
- Durable hardened stainless steel seat
- Captured venting
- Very competitive pricing
- Machined bar stock body, bonnet and piston eliminates porosity found in castings

The Premier 6025AL Series pressure reducing regulator's design is remarkably flexible.
Contact Premier Industries for a custom 6025AL Series regulator to meet your exact needs.

6025AL SERIES

AIR LOADED HIGH PRESSURE, 20K HYDRAULIC

Pressure Reducing Regulators

SPECIFICATIONS

- **MAXIMUM INLET PRESSURE:** 20000 PSIG *(1378.95 bar)*
- **MAXIMUM LOAD PRESSURE:** 100 PSIG *(6.89 bar)*
- **CONTROL PRESSURE RANGE:**
  - 25-3000 PSIG *(1.72-206.84 bar)*
    Diameter: 0.656"
    Area: 0.338 in²
    *Ratio: 37/1 ***
  - 50-6000 PSIG *(3.45-413.69 bar)*
    Diameter: 0.462"
    Area: 0.1676 in²
    *Ratio: 75/1 ***
  - 100 - 10000 psig *(6.89-689.48 bar)*
    Diameter: 0.362"
    Area: 0.1029 in²
    *Ratio: 122/1 ***
  - 300-15000 PSIG *(20.68 - 1034.21 bar)*
    Diameter: 0.313"
    Area: 0.0769 in²
    *Ratio: 163/1 ***
  - 500-20000 PSIG *(34.47 - 1378.95 bar)*
    Diameter: 0.25"
    Area: 0.0491 in²
    *Ratio: 256/1 ***

*** 4.0" diameter diaphragm*
Diaphragm area: 12.5664 in²

- **FLOW (Cv):** 0.06, 0.12, or 0.30
- **OPERATING TEMPERATURE:**
  - -15°F/-26°C to 165°F/74°C (BUNA-N)
  - -4°F/-20°C to 165°F/74°C (VITON®)
  - -65°F/-54°C to 165°F/74°C (EPDM)

  ***lower temperature compounds available upon request*

MATERIALS OF CONSTRUCTION

- **WETTED PARTS, OTHER**:
  - 316 Stainless Steel
  - 17-4 Stainless Steel
- **VALVES**:
  - 17-4 Stainless Steel, hardened
- **HOUSING, AIR ACTUATOR**:
  - 6061-T6 Aluminum, Clear Anodized
- **DIAPHRAGM, AIR ACTUATOR**:
  - Neoprene, Nylon Fabric Reinforced
- **O-RING OPTIONS:**
  - BUNA-N
  - Aflas®
  - Viton®
  - EPDM
  - KALREZ® *(Contact factory for pricing)*
- **BACK-UP RINGS**: PCTFE & PEEK®
- **VALVE SEAT**: 17-4 Stainless Steel, Hardened

PORTING

- **INLET/ OUTLET/VENT PORTING OPTIONS**:
  - 1/4" Medium pressure, High Pressure
  - 3/8" Medium pressure, High Pressure
- **LOAD PORT**: 1/4" FNPT standard,
  see mods on pg. 3 for other load port options
- **OPTIONAL GAUGE PORT:** 1/4" FNPT *(standard)*

OPTIONAL ITEMS

- Private label
- Panel mounting bracket: *P/N: 30-10500*
  (2.53 in panel hole)

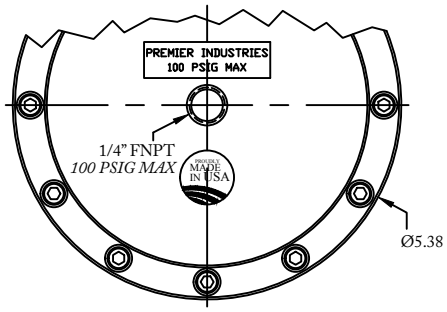

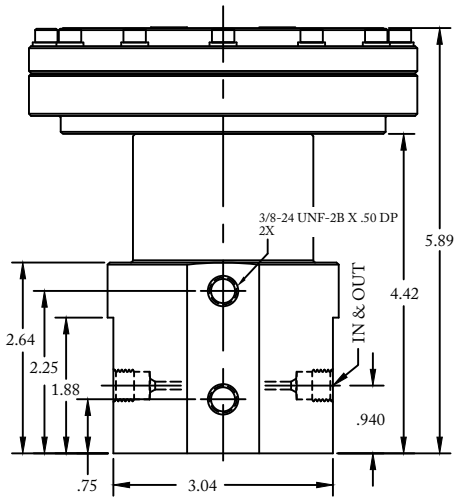

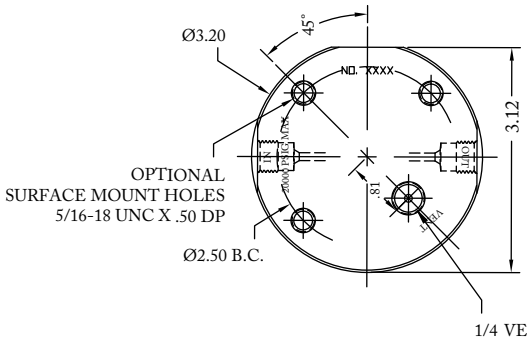

(Part number 30-10215AL shown above)

Kalrez® & Viton® are registered trademarks of E.I.duPont de Nemours and Company
PEEK® is a trademark of Victrex PLC

AIR LOADED HIGH PRESSURE, 20K HYDRAULIC

Pressure Reducing Regulators

6025AL SERIES

PART #:	-	1	2	3	4	5	-	6 7	-	MODS
30-10215AL	-						-		-	

1	OUTLET PRESSURE
3	25 - 3000 psig *(1.72-206.84 bar)*
6	50 - 6000 psig *(3.45-413.69 bar)*
7	100 - 10000 psig *(6.89-689.48 bar)*
8	300 - 15000 psig *(20.68-1034.21 bar)*
9	500 - 20000 psig *(34.47-1378.95 bar)*
2	**FLOW (Cv)**
0	Cv 0.06
1	Cv 0.12
3	Cv 0.30
3	**PORTING CONFIG.**
B	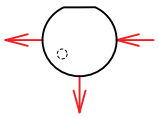
S	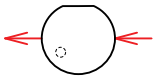

4	PORT SIZE (IN/OUT)
4	1/4”
6	3/8”

VENT PORT: 1/4” inlet/outlet port type

OPTIONAL GAUGE PORT: 1/4” FNPT (standard)

LOAD PORT: 1/4” FNPT standard, see mods for additional load port options.

5	PORT TYPE *(IN/OUT/VENT)*
4	Medium pressure
5	High pressure
6 7	**O-RINGS**
00	BUNA-N
01	AFLAS®
02	VITON®
05	EPDM
11	KALREZ® *(Contact factory for pricing)*

MODIFICATIONS	
BLANK	NONE
AS	1/4 AS5202 LOADER PORT
E	1/8 NPT LOADER PORT
J	1/4 SAE J1926 LOADER PORT
PTU	PORT TYPE UNIFORM
SM	SURFACE MOUNT

20000 PSIG MAX INLET (stainless steel)

The end user is responsible to ensure adequate fittings are used to connect regulator to plumbing.

Kalrez® & Viton® are registered trademarks of E.I.duPont de Nemours and Company

Aflas® is a registered trademark of the Asahi Glass Co., Ltd. Contact factory for material certifications. Fees may apply.

SINGLE STAGE DIAPHRAGM SENSED HYDRAULIC

Pressure Reducing Regulators

6250 SERIES

PREMIER INDUSTRIES

1590 99th Ln NE,
Minneapolis, MN 55449
763-786-4020

MADE IN THE USA

Minneapolis, MN

DESCRIPTION

Introducing the Premier 6250 Series hydraulic, single stage, diaphragm sensed, pressure reducing regulator. Premier 6250 Series regulators are designed for max inlet pressures up to 3500 PSIG (241.3 bar), and Cv 0.20. These hydraulic, pressure reducing regulators are versatile, offered with multiple materials, porting configurations, mounting styles etc. Gauges are optional, and two seat materials are offered, PEEK® and Vespel®.

FEATURES

- 3500 PSIG (241.3 bar) max inlet pressure
- Cv 0.20 MAX
- Machined bar stock body, bonnet, and piston eliminates porosity found in castings
- Optional panel mounting and mounting holes available

The Premier 6250 Series pressure reducing regulator's design is remarkably flexible.
Contact Premier Industries for a custom 6250 Series regulator to meet your exact needs.

6250 SERIES

SINGLE STAGE DIAPHRAGM SENSED HYDRAULIC

Pressure Reducing Regulators

SPECIFICATIONS

- **MAXIMUM INLET PRESSURE:** 3500 PSIG *(241.3 bar)*
- **CONTROL PRESSURE RANGES:**
  - 0-10 PSIG *(0 - 0.69 bar)*
  - 0-25 PSIG *(0 - 1.72 bar)*
  - 0-50 PSIG *(0 - 3.45 bar)*
  - 0-100 PSIG *(0 - 6.89 bar)*
  - 0-250 PSIG *(0 - 17.24 bar)*
  - 0-500 PSIG *(0 - 34.47 bar)*
- **FLOW (Cv):** 0.20

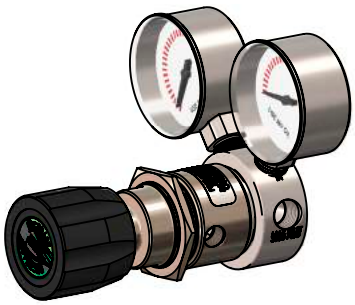

MATERIALS OF CONSTRUCTION

- **BODY OPTIONS:**
  - 6061-T6 Aluminum, Clear Anodized
  - 316 Stainless Steel
  - SAE 360 Brass, Nickel Plated
  - Inconel 625
  - Inconel 625, NACE compliant
- **BONNET OPTIONS:**
  - SAE 360 Brass, Nickel Plated *(Brass and 316 Stainless Steel body options)*
  - 6061-T6 Aluminum, Clear Anodized *(6061-T6 Aluminum, Clear Anodized body options)*
  - 303 Stainless Steel *(Inconel 625 body options)*
- **DIAPHRAGM:**
  - 316 Stainless Steel *(standard)*
  - Elgiloy® *(Inconel 625 body options)*
- **O-RING SEALS:** PTFE
- **VALVE SEAT:**
  - PEEK®
  - Vespel®
- **WETTED MATERIALS:**
  - 300 Series Stainless Steel *(for aluminum & brass bodies)*
  - 316 Stainless Steel *(for 316 stainless steel and Inconel 625 bodies)*
  - Monel® *(for Inconel 625, NACE compliant bodies)*
- ***OPTIONAL* PANEL MOUNTING NUTS:**
  - 6061-T6 Aluminum/Nickel Plated

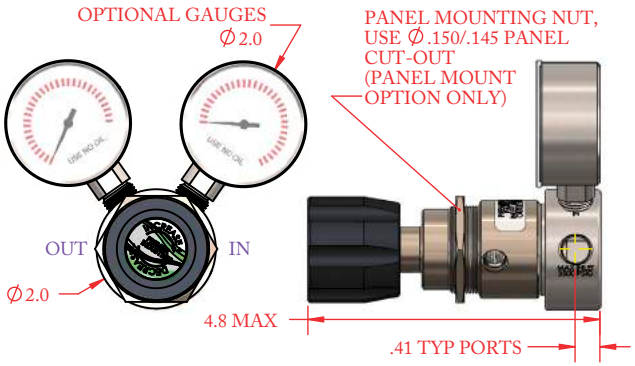

(Part number 50-12414-2S-XX-22 shown above)

PORTING

- **INLET:**
  - 1/4 FNPT
- **OUTLET:**
  - 1/4 FNPT

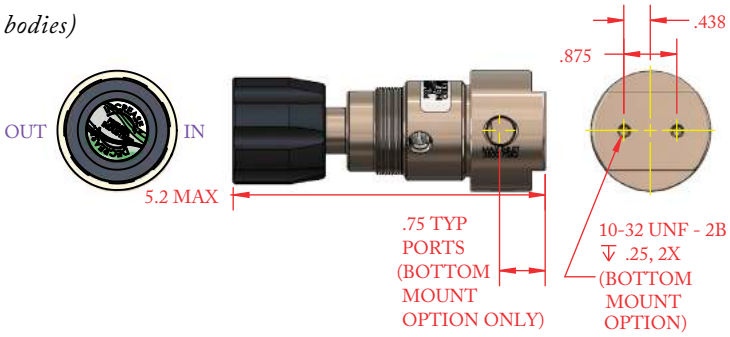

(Part number 50-12414-1C-XX shown above)

OPTIONS

- Gauges
- Private label
- Panel mounting bonnet & nut
- Bottom mount

Vespel® is a registered trademark of E.I.duPont de Nemours and Company. Monel® is a registered trademark of Special Metals Corporation
PEEK® is a registered trademark of Victrex PLC. Elgiloy® is a registered trademark of Elgiloy Specialty Metals Division, Combined Metals of Chicago L.L.C.

SINGLE STAGE DIAPHRAGM SENSED HYDRAULIC

Pressure Reducing Regulators

6250 SERIES

PART #	-	1	2	-	3	4	-	5	6
50-12414	-			-			-		

1	BODY MATERIAL *& FINISH*
1	6061-T6 Aluminum, *clear anodize*
2	316 Stainless Steel, *cleaned per spec #515*
3	SAE 360 Brass, *Nickel Plated*
8	Inconel 625, *cleaned per spec #515* *NACE compliant* *(Other wetted materials: Monel®)*
9	Inconel 625, *cleaned per spec #515* *(Other wetted materials: 316 Stainless Steel)*

2	PORTING CONFIGURATIONS
B	
S	
C	
E	

3	MAIN VALVE SEAT MATERIAL
1	PEEK®
2	Vespel®

4	OUTLET PRESSURE *(OUTLET GAUGE RANGE)*
1	0 - 10 PSIG / 0 - 0.69 bar *(0-15 PSIG gauge)*
2	0 - 25 PSIG / 0 - 1.72 bar *(0-30 PSIG gauge)*
3	0 - 50 PSIG / 0 - 3.45 bar *(0-60 PSIG gauge)*
4	0 - 100 PSIG / 0 - 6.89 bar *(0-160 PSIG gauge)*
5	0 - 250 PSIG / 0 - 17.24 bar *(0-400 PSIG gauge)*
6	0 - 500 PSIG / 0 - 34.47 bar *(0-1000 PSIG gauge)*

5	GAUGES
1	No gauges
2	Include gauges

Inlet gauge on porting configuration S.
Outlet gauge on configurations S E & B.

6	MOUNTING OPTION
1	None
2	Panel mount
3	Bottom mount
4	Panel mount & bottom mount

Vespel® is a registered trademark of E.I.duPont de Nemours and Company. Monel® is a registered trademark of Special Metals Corporation PEEK® is a registered trademark of Victrex PLC.

Contact factory for material certifications. Fees may apply.

DOME LOADED, BIAS SPRING HYDRAULIC DIAPHRAGM SENSED

Pressure Reducing Regulators

6250DLB SERIES

PREMIER INDUSTRIES

1590 99th Ln NE,
Minneapolis, MN 55449
763-786-4020

MADE IN THE USA

Minneapolis, MN

DESCRIPTION

Premier 6250DLB Series dome loaded/bias spring, single stage, diaphragm sensed, pressure reducing regulators, are rated for inlet pressure up to 3000 PSIG (206.84 bar), load pressures up to 500 PSIG (34.47 bar), and Cv 0.08 or 0.20. 6250DLB Series regulators are elastomer free and designed for use in tracking applications.

FEATURES

- Compatible with electro pneumatic controllers
- Elastomer free
- Designed for tracking applications
- 3000 PSIG (206.84 bar) max inlet pressure
- Cv 0.08 or 0.20

The Premier 6250DLB Series pressure reducing regulator's design is remarkably flexible. Contact Premier Industries for a custom 6250DLB Series regulator to meet your exact needs.

6250DLB SERIES

DOME LOADED, BIAS SPRING HYDRAULIC DIAPHRAGM SENSED

Pressure Reducing Regulators

SPECIFICATIONS

- **MAXIMUM INLET PRESSURE:** 3000 PSIG *(206.84 bar)*
- **MAXIMUM LOAD PRESSURE:** 500 PSIG *(34.47 bar)*
- **PRESET SPRING BIAS:** up to 100 PSIG *(6.89 bar)*
- **FLOW (Cv):** 0.08, or 0.20

MATERIALS OF CONSTRUCTION

- **PROCESS WETTED MATERIAL OPTIONS:**
  - 316 Stainless Steel
  - 303 Stainless Steel
  - Monel 405® & Elgiloy®
  - SAE 360 Brass, Nickel Plated
  - Monel 405® & Elgiloy® for process **AND** dome side
  - 316 Stainless Steel & Elgiloy® for process **AND** dome side *NACE MR0175 COMPLIANT*
- **DIAPHRAGM:**
  - 316 Stainless Steel
- **VALVE SEAT:**
  - PEEK®
- **SEALS:**
  - PTFE
- **OTHER WETTED MATERIALS (DOME SIDE):**
  - 316 Stainless Steel *(for 316 stainless steel & Monel Process options)*
  - SAE 360 Brass, Nickel Plated *(for SAE 360 Brass nickel plated option)*
  - Monel 405®/Elgiloy® *(for option 50-12662-5XX-XXX)*
  - 316 Stainless Steel /Elgiloy® *(for option 50-12662-6XX-XXX)*

PORTING

- **INLET:**
  - 1/4" FNPT
- **OUTLET:**
  - 1/4" FNPT
- **LOAD PORT:**
  - 1/4" FNPT

OPTIONS

- Private label
- Gauges

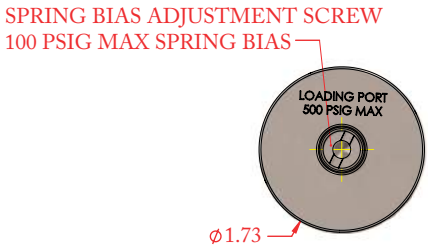

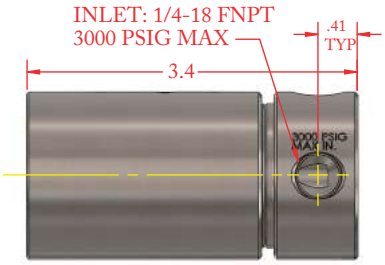

(Part Number: 50-12662 shown above)

Monel® is a registered trademark of Special Metals Corporation. PEEK is a trademark of Victrex PLC
Elgiloy® is a registered trademark of Elgiloy Specialty Metals Division, Combined Metals of Chicago L.L.C

DOME LOADED, BIAS SPRING HYDRAULIC DIAPHRAGM SENSED

Pressure Reducing Regulators

6250DLB SERIES

PART #	-	1	2	3	-	XXX
50-12662	-				-	

1	PROCESS WETTED MATERIALS
1	316 Stainless Steel
2	303 Stainless Steel
3	Monel 405® & Elgiloy®
4	SAE 360 Brass, Nickel Plated
5	Monel 405® & Elgiloy® for process **AND** dome side
6	316 Stainless Steel & Elgiloy® for process **AND** dome side *NACE MR0175 COMPLIANT*

2	PORTING OPTIONS
1	'A' Porting
2	'C' Porting
3	'I' Porting 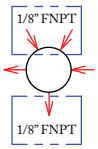

3	FLOW COEFFICIENT (Cv)
1	Cv 0.08 max
2	Cv 0.20 max

XXX	PRESET SPRING BIAS

**Preset spring bias pressure at 3000 psig inlet pressure.
Specify 0-100.
Pressure units are psig.
(EX: specify '30' for 30 psig spring bias pressure.)
Preset spring bias pressure is field adjustable by qualified technicians only.

Monel® is a registered trademark of Special Metals Corporation
Elgiloy® is a registered trademark of Elgiloy Specialty Metals Division, Combined Metals of Chicago L.L.C

Contact factory for material certifications. Fees may apply.

MINIATURE, HYDRAULIC HIGH PRESSURE

Pressure Reducing Regulators

6500 SERIES

PREMIER INDUSTRIES

1590 99th Ln NE,
Minneapolis, MN 55449
763-786-4020

MADE IN THE USA

Minneapolis, MN

DESCRIPTION

Premier 6500 Series pressure reducing regulators are your affordable and compact solution for high pressure hydraulic applications. These rugged, piston sensed regulators are designed to control inlet pressures up to 6000 PSIG *(413.69 bar)*. They feature a wide range of field adjustable delivery pressure ranges up to 6000 PSIG *(413.69 bar)*, and Cv: 0.06 or 0.2. With a variety of construction material options, porting configurations, hand-knob styles, and mounting options, you can be confident the Premier 6500 Series pressure reducing regulator will integrate seamlessly into your hydraulic application.

FEATURES

- Piston Sensed
- Main valve cartridge
- 3 knob styles: basic, fluted, and tee handle
- Machined bar stock body and piston eliminates porosity found in castings
- Rear mounting holes and threaded bonnet standard, optional panel mounting nuts available
- Lightweight nickel plated aluminum body standard
- Two, three, or four ¼" NPTF ports standard
- Non-venting
- Field adjustable outlet pressure ranges
- Minimal soft goods
- Compact and economically priced
- Optional tamper resistant acorn nut

The Premier 6500 Series pressure reducing regulator's design is remarkably flexible. Contact Premier Industries for a custom 6500 Series regulator to meet your exact needs.

6500 SERIES

MINIATURE, HYDRAULIC HIGH PRESSURE

Pressure Reducing Regulators

SPECIFICATIONS

- **MAXIMUM INLET PRESSURE:**
  - 6000 PSIG *(413.69 bar)*
- **CONTROL PRESSURE RANGES:**
  - 0-80 PSIG *(0-5.52 bar)*
  - 0-140 PSIG *(0-9.65 bar)*
  - 0-220 PSIG *(0-15.17 bar)*
  - 5-700 PSIG *(0.34-48.26 bar)*
  - 5-1200 PSIG *(0.34-82.74 bar)*
  - 5-1800 PSIG *(0.34-124.11 bar)*
  - 5-2500 PSIG *(0.34 - 172.37 bar)*
  - 10-6000 PSIG *(0.69-413.69 bar)*
- **Cv:** 0.06 or 0.2
- **DESIGN PROOF PRESSURE:** 150% maximum rated
- **LEAK RATE:** Bubble tight N_2

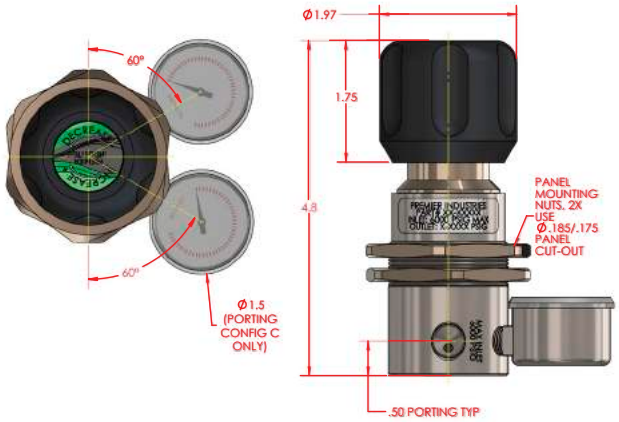

(P/N: 50-12283-2CXXXX222 w/ fluted knob shown above)

MATERIALS OF CONSTRUCTION

- **BODY**:
  - 6061-T6 Aluminum, Nickel Plated *(standard)*
  - 303 Stainless Steel
  - 316 Stainless Steel
  - SAE 360 Brass/Nickel Plated
  - Monel®
- **WETTED PARTS**:
  - 316 Stainless Steel *(with 316 stainless steel body option)*
  - 300 Series Stainless Steel /
  - 17-4 Stainless Steel *(with all other body options)*
- **SEALS**:
  - Low-temperature nitrile *(standard)*
  - Nitrile
  - Viton®
  - EPDM
  - Neoprene
- **VALVE SEAT**:
  - PEEK® *(standard)*
  - Vespel®

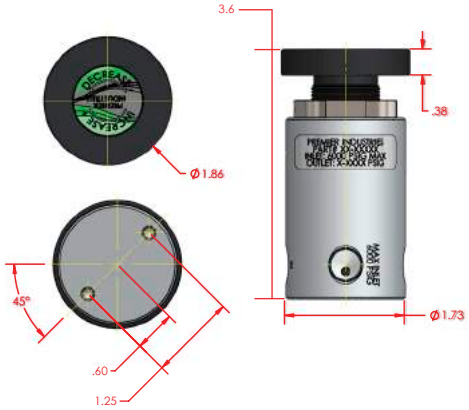

(P/N: 50-12283-1BXXXX110 w/ standard knob shown above)

PORTING

- **STANDARD INLETS**: 1/4" FNPT
- **STANDARD OUTLETS**: 1/4" FNPT
- **PORT OPTIONS**:
  - Two, three, or four port versions available

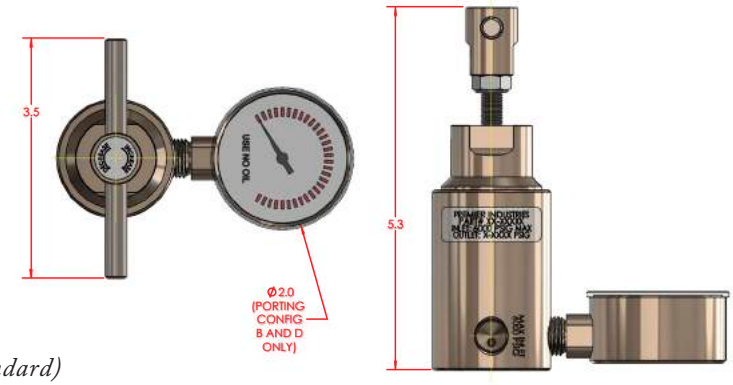

(P/N: 50-12283-4DXXXX312 w/ tee handle shown above)

OPTIONAL ITEMS

- Gauges (plug): *stainless steel for both stainless body options, chrome plated brass for all other options*
- Basic handknob, fluted handknob, tee handle, or acorn nut
- Panel mounting nuts *(threaded bonnet and mounting holes standard)*
- CGA fittings
- Private label

PEEK is a registered trademark of Victrex PLC
Vespel and Viton are registered trademarks of E.I.duPont de Nemours and Company
Monel® is a registered trademark of Special Metals Corporation.

MINIATURE, HYDRAULIC HIGH PRESSURE

Pressure Reducing Regulators

6500 SERIES

PART #	-	1	2	-	3	4	-	5	6	-	7	8	9
50-12283	-			-			-			-			

1	BODY MATERIAL *& FINISH*
1	6061-T6 Aluminum *Nickel Plated*
2	303 Stainless Steel *Clean per spec #515*
3	316 Stainless Steel *Clean per spec #515*
4	SAE 360 Brass *Nickel Plated*
5	Monel 400®
2	**PORTING CONFIGURATIONS**
A	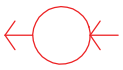
B	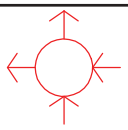
C*	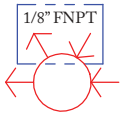
D	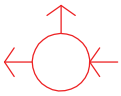

PEEK is a registered trademark of Victrex PLC
Vespel and Viton are registered trademarks of E.I.duPont de Nemours & Company. Monel® is a registered trademark of Special Metals Corporation.

** All ports are 1/4" FNPT unless otherwise indicated on the porting configuratons.*

****TAMPER RESISTANT ACORN NUT**
THE END USER IS RESPONSIBLE TO SPECIFY A PRESET OUTLET PRESSURE. IF AN OUTLET PRESSURE IS NOT SPECIFIED, THE PRESSURE WILL BE LEFT UNSET. NEVER EXCEED THE MAXIMUM OUTLET PRESSURE SPECIFIED ON THE PART NUMBER.

Contact factory for material certifications. Fees may apply.

3	OUTLET PRESSURE
1	0-80 PSIG *(0 - 5.52 bar)*
2	0-140 PSIG *(0 - 9.65 bar)*
3	0-220 PSIG *(0 - 15.17 bar)*
4	5-700 PSIG *(0.34 - 48.26 bar)*
5	5-1200 PSIG *(0.34 - 82.73 bar)*
6	5-1800 PSIG *(0.34 - 124.12 bar)*
7	5-2500 PSIG *(0.34 - 172.37 bar)*
8	10-6000 PSIG *(0.69 - 413.69 bar)*
4	**MAIN VALVE (Cv)**
1	0.06 max
2	0.20 max
5	**O-RING SEAL MATERIAL**
1	Nitrile
2	Low-temp nitrile
3	Viton®
4	EPDM
5	Neoprene

6	SEAT MATERIAL
4	PEEK®
5	Vespel®
7	**HAND KNOB**
1	Basic knob
2	Fluted knob
3	Tee handle
4	None *** locked / tamper resistant*
8	**MOUNTING** *(threaded bonnet standard)*
1	Mounting holes
2	Panel mounting nuts & mounting holes
9	**GAUGES**
0	None
2	Include gauges *(port config. "A" not available with gauges)*

AIR LOADED HIGH PRESSURE, HYDRAULIC

Pressure Reducing Regulators

6500AL SERIES

PREMIER INDUSTRIES

1590 99th Ln NE,
Minneapolis, MN 55449
763-786-4020

MADE IN THE USA

Minneapolis, MN

DESCRIPTION

Premier 6500AL Series air loaded, pressure reducing regulators are your affordable and compact solution for high pressure, hydraulic applications. These rugged, piston sensed regulators are rated for 6000 PSIG *(413.69 bar)* and Cv: 0.06 or 0.2. With a maximum loading pressure of 1000 PSIG, and three available load ratios, 1:2, 1:3, and 1:4, a vast range of outlet pressures can be controlled *(maximum outlet pressure of 4000 PSIG / 275.79 bar with a 1:4 ratio)*. Premier 6500AL regulators feature captured venting to safely pipe away expelled media. With a variety of construction material options, load ratios, porting configurations, and mounting options, you can be confident the Premier 6500AL Series air loaded, pressure reducing regulator will integrate seamlessly into your hydraulic application.

FEATURES

- Compatible with electro-pneumatic controllers & manual pilot regulators
- Piston Sensed
- Captured venting
- Compact design
- Machined bar stock body and piston eliminates porosity found in castings
- Bottom mount *(standard)*
- Optional panel mounting
- Two or four port designs available

The Premier 6500AL Series pressure reducing regulator's design is remarkably flexible.
Contact Premier Industries for a custom 6500AL Series regulator to meet your exact needs.

6500AL SERIES

AIR LOADED HIGH PRESSURE, HYDRAULIC

Pressure Reducing Regulators

SPECIFICATIONS

- **MAXIMUM INLET PRESSURE:**
  - 6000 PSIG *(413.69 bar)*
- **MAXIMUM LOADING PRESSURE:**
  - 1000 PSIG *(68.95 bar)*
- **LOADER RATIO / OUTLET PRESSURE:**
  - **1:2**, 2000 PSIG MAX *(137.9 bar)*
  - **1:3**, 3000 PSIG MAX *(206.84 bar)*
  - **1:4**, 4000 PSIG MAX *(275.79 bar)*
- **Cv:** 0.06 or 0.2
- **LEAK RATE:** Bubble tight N_2

MATERIALS OF CONSTRUCTION

- **BODY & BONNET**:
  - 6061-T6 Aluminum, Clear Anodized *(standard)*
  - 303 Stainless Steel
  - 316 Stainless Steel
- **PISTON & HOUSING**:
  - 303 stainless steel *(303 stainless body & aluminum body)*
  - 316 Stainless steel *(316 stainless body)*
- **MAIN VALVE COMPONENTS**:
  - 300 Series Stainless Steel *(303 stainless steel body/aluminum body)*
  - 316 Stainless steel *(316 stainless steel body)*
- **MAIN VALVE SEAT**:
  - PEEK®
  - Vespel®
- **O-RING SEALS**:
  - Nitrile
  - Viton®
  - EPDM
  - Neoprene
- **PANEL MOUNTING NUTS (OPTIONAL)**:
  - 6061-T6 Aluminum, Nickel Plated

PORTING

- **STANDARD INLETS**: 1/4" FNPT
- **STANDARD OUTLETS**: 1/4" FNPT
- **DOME PORT**: 1/4" FNPT
- **VENT PORT**: 1/4" FNPT
- **GAUGE PORTS**: 1/8" FNPT

OPTIONS

- Gauges
- Private label
- Panel mounting nuts *(X2 required)*
  (Order Separately: P/N 50-11803)
- For custom materials of construction
  (monel®, hastelloy® etc.) please contact factory.

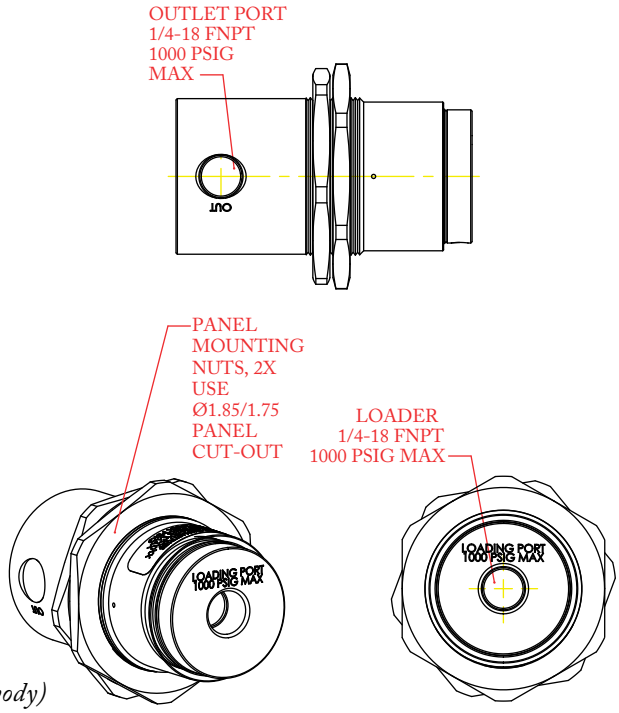

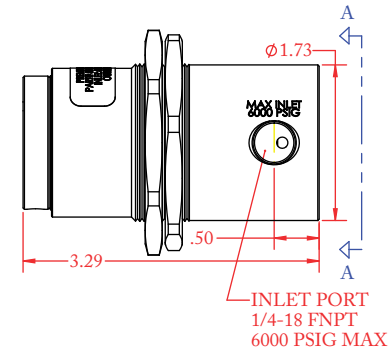

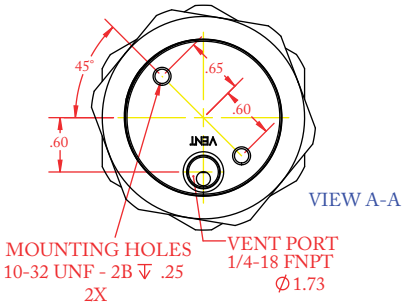

(P/N: 50-12370 shown above)

PEEK® is a registered trademark of Victrex PLC. Monel is a registered trademark of Special Metals Corporation
Vespel® and Viton® are registered trademarks of E.I.duPont de Nemours and Company
Hastelloy® is a registered trademark of Haynes International, Inc.

AIR LOADED HIGH PRESSURE, HYDRAULIC

Pressure Reducing Regulators

6500AL SERIES

PART #	-	1	2	-	3	4	5	-	6	7
50-12370	-			-				-		

1	BODY & BONNET MATERIAL / *FINISH*
1	6061-T6 Aluminum *Clear Anodize*
2	303 Stainless Steel *Clean per spec #515*
3	316 Stainless Steel *Clean per spec #515*
2	**PORTING**
1	2 port
2	4 port
3	**O-RING MATERIAL**
1	Nitrile
2	Viton®
3	EPDM
4	Neoprene

4	SEAT MATERIAL
4	PEEK®
5	Vespel®
5	**Cv (FLOW)**
1	0.06
2	0.2
6	**GAUGES**
1	None
2	Include gauges *(4 port only)*

7	LOADER RATIO (OUTLET PRESSURE)
2	1:2 *(2000 psig / 137.9 bar max outlet)*
3	1:3 *(3000 psig / 206.84 bar max outlet)*
4	1:4 *(4000 psig / 275.79 bar max outlet)*

PEEK® is a registered trademark of Victrex PLC
Vespel® and Viton® are registered trademarks of E.I.duPont de Nemours & Company
For custom materials of construction (monel®, hastelloy® etc.) please contact factory.
Contact factory for material certifications. Fees may apply.

DOME LOADED HIGH PRESSURE, HYDRAULIC

Pressure Reducing Regulators

6500DL SERIES

PREMIER INDUSTRIES

1590 99th Ln NE,
Minneapolis, MN 55449
763-786-4020

MADE IN THE USA

Minneapolis, MN

DESCRIPTION

Premier 6500DL Series dome loaded, pressure reducing regulators are your affordable and compact solution for high pressure hydraulic applications. These rugged, piston sensed regulators are rated for 6000 PSIG *(413.69 bar)*, feature a 1:1 loader with a maximum outlet pressure of 1000 PSIG *(68.95 bar)* and Cv: 0.06 or 0.2. Premier 6500DL regulators feature captured venting to safely pipe away expelled hydraulic media. With a variety of construction material options, porting configurations, and mounting options, you can be confident the Premier 6500DL Series dome loaded, pressure reducing regulator will integrate seamlessly into your hydraulic application.

FEATURES

- Compatible with electro-pneumatic controllers
- Piston Sensed
- Captured venting
- Lightweight, compact design
- Machined bar stock body and piston eliminates porosity found in castings
- Bottom mount *(standard)*
- Optional threaded body & panel mounting nuts
- Two or four port designs available
- 1:1 loader with max outlet pressure of 1000 PSIG *(68.95 bar)*
- Minimal soft goods
- Cv: 0.06 or 0.2

The Premier 6500DL Series pressure reducing regulator's design is remarkably flexible.
Contact Premier Industries for a custom 6500DL Series regulator to meet your exact needs.

6500DL SERIES

DOME LOADED HIGH PRESSURE, HYDRAULIC
Pressure Reducing Regulators

SPECIFICATIONS

- **MAXIMUM INLET PRESSURE:**
  - 6000 PSIG *(413.69 bar)*
- **OUTLET PRESSURE:**
  - 1000 PSIG (*68.95 bar)*
- **MAX DOME LOAD:** 1000 PSIG (68.95 bar)
- **LOAD RATIO:** 1:1**

** ***Cv 0.06:*** *an additional 10-50 psi (0.69- 3.45 bar) dome load is required to maintain a 1:1 outlet pressure to dome load ratio.*
Cv 0.2: *an additional 10-70 psi (0.69- 3.45 bar) dome load is required to maintain a 1:1 outlet pressure to dome load ratio.*

- **Cv:** 0.06 or 0.2
- **LEAK RATE:** Bubble tight N_2

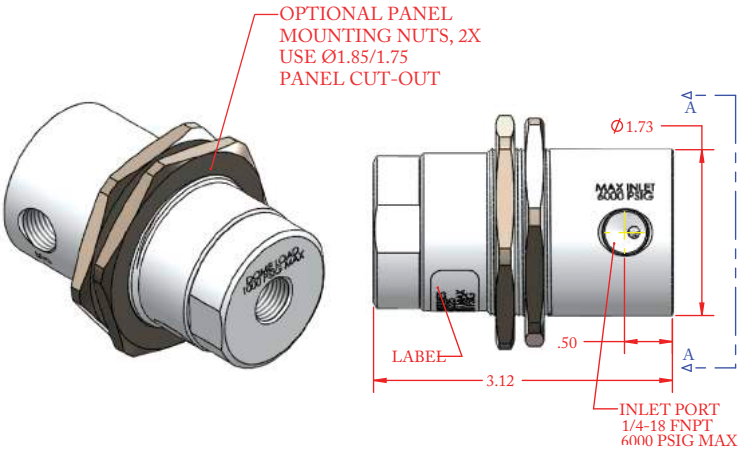

MATERIALS OF CONSTRUCTION

- **BODY & BONNET**:
  - 6061-T6 Aluminum, Clear Anodized *(standard)*
  - 303 Stainless Steel
  - 316 Stainless Steel
- **PISTON & HOUSING**:
  - 303 stainless steel *(303 stainless body & aluminum body)*
  - 316 Stainless steel *(316 stainless body)*
- **MAIN VALVE COMPONENTS**:
  - 300 Series Stainless Steel *(303 stainless steel body/aluminum body)*
  - 316 Stainless steel *(316 stainless steel body)*
- **MAIN VALVE SEAT**:
  - PEEK®
  - Vespel®
- **O-RING SEALS**:
  - Nitrile
  - Viton®
  - EPDM
  - Neoprene
- **PANEL MOUNTING NUTS (OPTIONAL)**:
  - 6061-T6 Aluminum, Nickel Plated

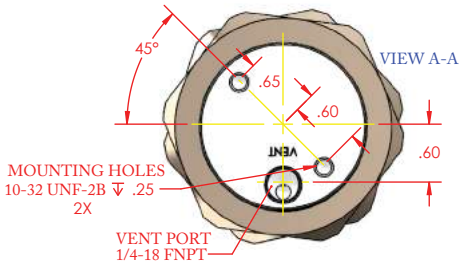

(P/N: 50-12225-11XX1 shown above)

PORTING

- **STANDARD INLETS**: 1/4" FNPT
- **STANDARD OUTLETS**: 1/4" FNPT
- **DOME PORT**: 1/4" FNPT
- **VENT PORT**: 1/4" FNPT
- **GAUGE PORTS**: 1/8" FNPT

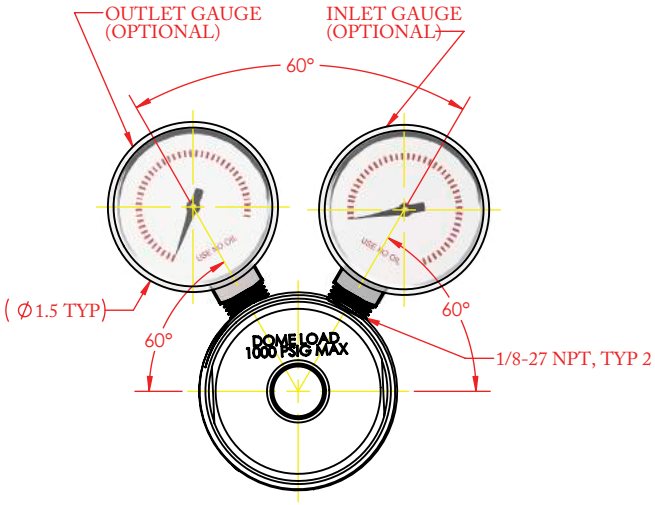

(P/N: 50-12225-12XX2 shown above)

OPTIONS

- Gauges
- Private label
- Panel mounting nuts *(X2 required)*
  (Order Separately: P/N 50-11803)
- For custom materials of construction
  (monel®, hastelloy® etc.) please contact factory.

PEEK is a registered trademark of Victrex PLC. Monel is a registered trademark of Special Metals Corporation
Vespel and Viton are registered trademarks of E.I.duPond De Nemours and Company
Hastelloy is a registered trademark of Hayes International, Inc.

DOME LOADED HIGH PRESSURE, HYDRAULIC

Pressure Reducing Regulators

6500DL SERIES

PART #	-	1	2	-	3	4	-	5	6
50-12225	-			-			-		

1	BODY & BONNET MATERIAL / *FINISH*
1	6061-T6 Aluminum *Clear Anodize*
2	303 Stainless Steel *Clean per spec #515*
3	316 Stainless Steel *Clean per spec #515*
2	**PORTING**
1	2 port
2	4 port
3	**O-RING MATERIAL**
1	Nitrile
2	Viton®
3	EPDM
4	Neoprene

4	SEAT MATERIAL
4	PEEK®
5	Vespel®
5	**Cv RATING**
1	0.06
2	0.2
6	**GAUGES**
1	None
2	Include gauges *(4 port only)*

PEEK is a registered trademark of Victrex PLC
Vespel and Viton are registered trademarks of E.I.duPond De Nemours and Company
For custom materials of construction (monel®, hastelloy® etc.) please contact factory.
Contact factory for material certifications. Fees may apply.

MINIATURE, HYDRAULIC HIGH PRESSURE, 10K

Pressure Reducing Regulators

6560 SERIES

PREMIER INDUSTRIES

1590 99th Ln NE,
Minneapolis, MN 55449
763-786-4020

MADE IN THE USA

Minneapolis, MN

DESCRIPTION

Premier 6560 Series pressure reducing regulators are your affordable and compact solution for high pressure hydraulic applications. These rugged, piston sensed regulators are designed for inlet pressures up to 10000 PSIG *(689.48 bar)*. They feature a wide range of delivery pressure ranges up to 10000 PSIG *(689.48 bar)*, and include a tamper resistant captured vent.

FEATURES

- 10000 psig *(689.48 bar)* max
- Captured-venting
- Cv 0.06, or 0.20
- Machined bar stock body and piston eliminates porosity found in castings
- Rear mounting holes standard with optional panel mounting nuts
- Compact and economically priced

The Premier 6560 Series pressure reducing regulator's design is remarkably flexible. Contact Premier Industries for a custom 6560 Series regulator to meet your exact needs.

6560 SERIES

MINIATURE, HYDRAULIC HIGH PRESSURE, 10K

Pressure Reducing Regulators

SPECIFICATIONS

- **MAXIMUM INLET PRESSURE:**
  - 10000 PSIG *(689.48 bar)*
- **CONTROL PRESSURE RANGES:**
  - 0-250 PSIG *(0-17.24 bar)*
  - 5-500 PSIG *(0.34-34.47 bar)*
  - 5-800 PSIG *(0.34-55.16 bar)*
  - 10-1500 PSIG *(0.69-103.42 bar)*
  - 15-2500 PSIG *(1.03-172.37 bar)*
  - 25-4000 PSIG *(1.72-275.79 bar)*
  - 50-6000 PSIG *(3.45-413.69 bar)*
  - 100-10000 PSIG *(6.89-689.48 bar)*
- **Cv:** 0.06, 0.20

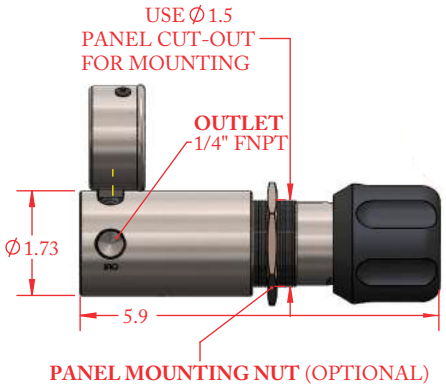

MATERIALS OF CONSTRUCTION

- **BODY**:
  - 303 Stainless Steel
  - 316 Stainless Steel
- **BONNET**:
  - 303 Stainless Steel *(Non-wetted)*
- **VALVE STEM**:
  - 17-4 Stainless Steel
- **OTHER WETTED PARTS**:
  - 316 Stainless Steel *(with 316 stainless steel body option)*
  - 300 Series Stainless Steel *(with all other body options)*
- **SENSOR PISTON & HOUSING**: 17-4 Stainless Steel
- **SEALS**:
  - Buna-N
  - Viton®
  - EPDM
  - Low-temperature nitrile
- **MAIN VALVE & VENT VALVE SEAT OPTIONS**:
  - Vespel®
  - PEEK®
  - 17-4 Stainless Steel & 440C Stainless Steel

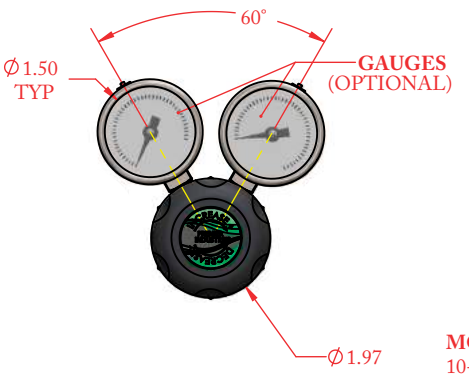

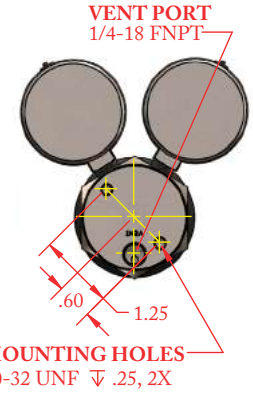

PORTING

- **STANDARD INLET**: 1/4" FNPT
- **STANDARD OUTLET**: 1/4" FNPT
- **GAUGE PORTS**: 1/8" FNPT
- **VENT PORT**: 1/4" FNPT

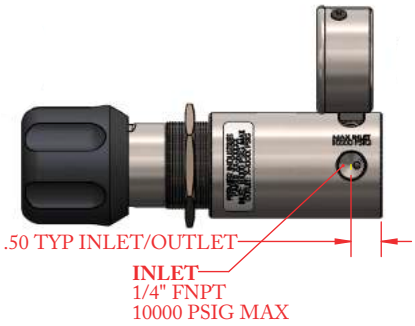

(P/N: 30-10340 shown above)

OPTIONAL ITEMS

- Gauges *(316 stainless steel wetted components, 304 stainless steel case, glycerine filled)*
- Panel mounting configuration
- Private label

Vespel® and Viton® are registered trademarks of E.I.duPont de Nemours and Company
PEEK® is a registered trademark of Victrex PLC

MINIATURE, HYDRAULIC HIGH PRESSURE, 10K

Pressure Reducing Regulators

6560 SERIES

SERIES	1	-	2	3	4	-	5	6	7
30-10340		-				-			

1	VENT/MAIN VALVE SEAT MATERIAL
V	Vespel®
P	PEEK®
S	17-4 Stainless Steel & 440C Stainless Steel

2	OUTLET PRESSURE
1	0-250 psig *(0-17.24 bar)*
2	5-500 psig *(0.34-34.47 bar)*
3	5-800 psig *(0.34-55.16 bar)*
4	10-1500 psig *(0.69-103.42 bar)*
5	15-2500 psig *(1.03-172.37 bar)*
6	25-4000 psig *(1.72-275.79)*
7	50-6000 psig *(3.45-413.69 bar)*
8	100-10000 psig *(6.89-689.48 bar)*

3	BODY MATERIAL & FINISH
1	303 Stainless Steel
2	316 Stainless Steel

4	O-RING MATERIAL
1	BUNA-N
2	VITON®
3	EPDM
4	NITRILE, LO-TEMP

5	FLOW (Cv)
1	0.06
2	0.20

6	GAUGES/ PORTING
1	No gauges, 'S' porting
2	No gauges, 'C' porting
3	Include gauges, 'C' porting

7	MOUNTING
1	Bottom mount only
2	Panel mounting & bottom mount

10000 PSIG MAX INLET

The end user is responsible to ensure adequate fittings are used to connect regulator to plumbing.

Vespel® & Viton® are registered trademarks of E.I.duPont de Nemours and Company. PEEK® is a registered trademark of Victrex PLC

Contact factory for material certifications. Fees may apply.

HIGH PRESSURE ROUGHING REGULATOR

For two stage conversion

R0.1 SERIES

PREMIER INDUSTRIES

1590 99th Ln NE,
Minneapolis, MN 55449
763-786-4020

MADE IN THE USA

Minneapolis, MN

DESCRIPTION

High pressure R0.1 Series roughing regulators are single stage, piston sensed, pressure reducing regulators designed to combine with Premier high pressure regulators for increased outlet pressure stability.

Premier R0.1 Series roughing regulators easily thread into standard 1/4" NPT & SAE AS5202-04 inlet ports. Rated for inlet pressures up to 10000 psig, and Cv 0.10.

FEATURES

- Significantly reduces supply pressure effect when combined with Premier high pressure regulators
- Cv 0.1 max
- Compatible with a wide range of Premier regulators
- 10000 psig max inlet pressure
- Compact design
- 7/8" hex for easy torque
- Machined bar stock body, bonnet and piston eliminates porosity found in castings

The Premier 300M Series pressure reducing regulator's design is remarkably flexible. Contact Premier Industries for a custom 300M Series regulator to meet your exact needs.

R0.1 SERIES

HIGH PRESSURE ROUGHING REGULATOR

For two stage conversion

SPECIFICATIONS

- **MAXIMUM INLET PRESSURE:** 10000 PSIG *(689.5 bar)*
- **OUTLET PRESSURE *(NON-ADJUSTABLE)*:**
  - 700 psig - 2000 psig *(48.3 bar - 137.9 bar)*
- **FLOW (Cv):** 0.10

MATERIALS OF CONSTRUCTION

- **WETTED MATERIALS** :
  - 303 Stainless Steel
  - 316 Stainless Steel
- **SEALS**:
  - Viton-A®
  - Buna-N
  - EPDM
  - Low temp nitrile
  - Neoprene
- **MAIN VALVE SEAT OPTIONS**:
  - Vespel SP-1®
  - PEEK 450G®

PORTING

- **INLET / *OUTLET PORTING*** :
  - 1/4" FNPT / *1/4 MPNT*
  - SAE AS5202-04 / *SAE AS4395-04*

OPTIONS

- Private label

(Part number 30-10589-XXXX1 shown above)

Vespel SP-1® and Viton-A ®are registered trademarks of E.I.duPont de Nemours and Company

PEEK 450G® is a registered trademark of Victrex PLC

HIGH PRESSURE ROUGHING REGULATOR

For two stage conversion

R0.1 SERIES

PART #	-	1	2	3	4	5	-	X *(special configuration)*
30-10589	-						-	

1	WETTED MATERIALS
1	303 Stainless Steel
2	316 Stainless Steel
2	**SEALS**
1	Buna-N
2	Viton-A®
3	Low temp nitrile
4	Neoprene
5	EPDM
3	**SEAT MATERIAL**
1	Vespel SP-1®
2	PEEK 450G®

4	OUTLET PRESSURE
1	700-2000 PSIG *(48.3 bar - 137.9 bar)*
5	**PORTING** ***(INLET/OUTLET)***
1	1/4" FNPT / 1/4" MNPT
2	SAE AS5202-04 / SAE AS4395-04

SPECIAL CONFIGURATION	
BLANK	Standard configuration

10000 PSIG MAX INLET

The end user is responsible to ensure adequate fittings are used to connect regulator to plumbing.

Vespel SP-1® and Viton-A ®are registered trademarks of E.I.duPont de Nemours and Company
PEEK 450G® is a registered trademark of Victrex PLC

Contact factory for material certifications. Fees may apply.

BACK PRESSURE REGULATORS

Premier offers a selection of back pressure regulators for use in a wide variety of industries worldwide. We offer back pressure regulators in varying: sizes (ranging from 0.7" to larger 8" models), bonnet and body materials (with varying corrosion resistance), pressure ranges, and flow rates. With the flexibility of optional port alignments, port sizes/types, relief and shut off valves, loading styles, elastomers, color anodizing and more, Premier back pressure regulators provide maximum compatibility to your unique application. If you do not see a regulator in our standard series that meets your needs, please contact us for a custom design or modification.

PRESSURE REDUCING REGULATORS

2100 Series *Compact, Diaphragm Sensed, Back Pressure Regulators* **263**

2100DLB Series *Dome Loaded / Bias Spring, Compact, Diaphragm Sensed, Back Pressure Regulators* **266**

2400 Series *High Sensitivity, Low Pressure, High Flow Back Pressure Regulators* **269**

2400DL Series *Dome Loaded, High Sensitivity, Low Pressure, High Flow Back Pressure Regulators* **271**

3100 Series *High Pressure,10K Back Pressure Regulators* **273**

3100AL Series *Air Loaded, High Pressure, Back Pressure Regulators* **276**

3100DL Series *Dome Loaded, High Pressure, Back Pressure Regulators* **279**

3123 Series *High Pressure, 15K Back Pressure Regulators* **282**

3123AL Series *Air Loaded, High Pressure, Back Pressure Regulators* **285**

5150 Series *High Flow, Low Pressure, Back Pressure Regulators* **288**

5150AL Series *Air Loaded, High Flow, Low Pressure, Back Pressure Regulators* **291**

6100 Series *Hydraulic, High Pressure, Back Pressure Regulators.* **294**

6100AL Series *Air Loaded, Hydraulic, High Pressure, Back Pressure Regulators.* **297**

6100DL Series *Dome Loaded, Hydraulic, High Pressure, Back Pressure Regulators.* **300**

6123 Series *High Pressure, 15K, Low Torque Hand Knob Back Pressure Regulators* **303**

P91W Series *Dome Loaded, Diaphragm Sensed, Back Pressure Regulators.* **306**

COMPACT DIAPHRAGM SENSED

Back Pressure Regulators

2100 SERIES

PREMIER INDUSTRIES

1590 99th Ln NE,
Minneapolis, MN 55449
763-786-4020

MADE IN THE USA

Minneapolis, MN

DESCRIPTION

Premier 2100 series back pressure regulators are are precision, highly repeatable, diaphragm sensed regulators useful for numerous industrial and R&D controls, monitors, and systems. Premier 2100 Series regulators have a max relief pressure of 500 PSIG *(34.5 bar)*, and are fitted with Elgiloy® diaphragms. These regulators are available in a variety of materials for the regulation of a broad range of media.

FEATURES

- Max relief pressure: 500 PSIG *(34.5 bar)*
- Elgiloy® diaphragm
- Cv: 0.14, 0.2, 0.06
- Optional metal to metal seal ensures gas purity and integrity
- Very competitive pricing
- Machined bar stock body, and bonnet eliminates porosity found in castings
- Models are available for both corrosive and non-corrosive service
- Numerous optional features available

The Premier 2100 Series pressure reducing regulator's design is remarkably flexible. Contact Premier Industries for a custom 2100 Series regulator to meet your exact needs.

2100 SERIES

COMPACT DIAPHRAGM SENSED
Back Pressure Regulators

SPECIFICATIONS

- **MAXIMUM CONTROL PRESSURE:** 500 PSIG *(34.5 bar)*
- **FLOW (Cv):** 0.14, 0.2, or 0.06

MATERIALS OF CONSTRUCTION

- **BODY OPTIONS:**
  - 316 Stainless Steel
  - 303 Stainless Steel
  - SAE 360 Brass
  - Duplex 2205
- **BONNET OPTIONS:**
  - 303 Stainless Steel
  - 2024 Aluminum
- **DIAPHRAGM:**
  - Elgiloy® *(standard)*
- **DIAPHRAGM SEAL :**
  - PTFE
- **VALVE SEAT:**
  - PFA
- **O-RING OPTIONS:**
  - Viton®
  - BUNA-N
  - EPDM
  - PTFE

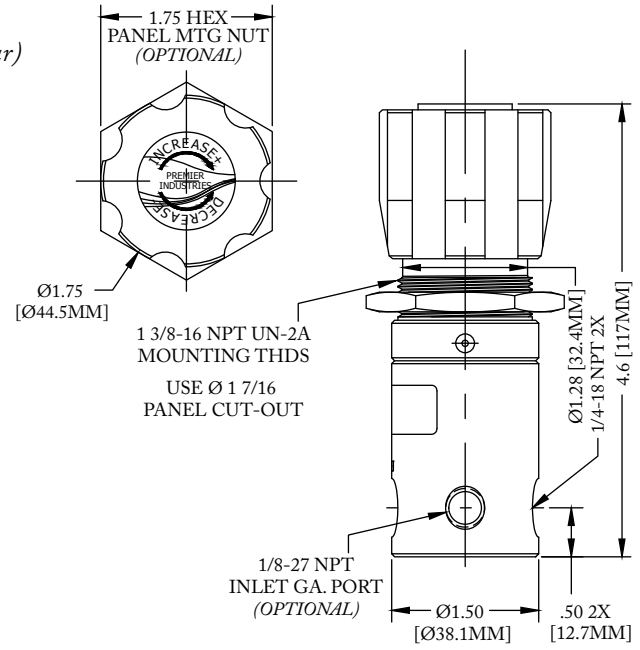

(Part number shown above: 50-11998)

PORTING

- **STANDARD INLET:**
  - 1/4" FNPT
- **OPTIONAL INLETS:**
  - 1/4" SAE AS5202 *(See P/N: 50-11998A)*
- **STANDARD OUTLET:**
  - 1/4" NPT
- **OPTIONAL OUTLETS:**
  - 1/4" SAE AS5202 *(See P/N: 50-11998A)*

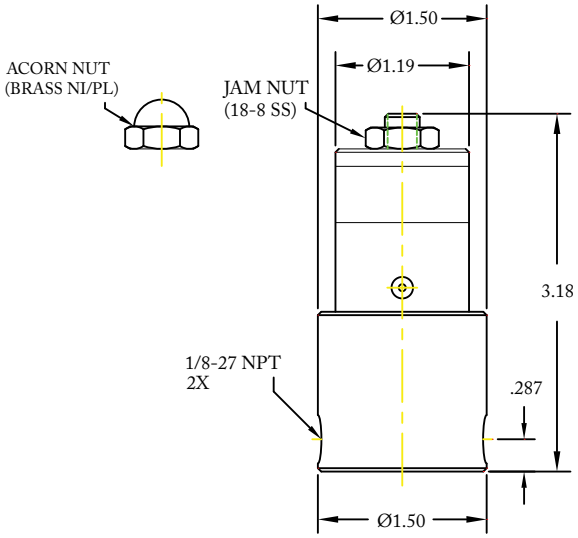

(Part number shown above: 50-11187)

OPTIONS

- Gauges
- Tamper resistant acorn nut
- Panel mounting nut *(P/N: 50-11305)*
- Private Label

Viton® is a registered trademark of E.I.duPont de Nemours and Company

Elgiloy® is a registered trademark of Elgiloy Specialty Metals Division, Combined Metals of Chicago L.L.C.

COMPACT DIAPHRAGM SENSED
Back Pressure Regulators

2100 SERIES

PART #	-	1	2	3	-	4 5	-	6 7	-	8
50-11998	-				-		-		-	

1	BODY/BONNET MATERIALS *(MAX. INLET PRESSURE)*
B	SAE 360 Brass *(body)* 2024 Aluminum*(bonnet)*
0	316 Stainless Steel *(body)* 303 Stainless Steel *(bonnet)*
1	303 Stainless Steel *(body & bonnet)*
2	Duplex 2205 *(body)* 303 Stainless Steel *(bonnet)*

2	MAX CONTROL PRESSURE
B	25 PSIG / *1.72 bar*
A	50 psig / *3.45 bar*
1	100 PSIG / *6.89 bar*
2	250 PSIG / *17.24 bar*
3	300 PSIG / *20.68 bar*
5	500 PSIG / *34.47 bar*

3	FLOW (Cv)
1	Cv 0.14
2	Cv 0.2
0	Cv 0.06

4 5	O-RING SEALS
00	BUNA-N
02	VITON®
03	PTFE
05	EPDM

6 7	INLET GAUGE PORT *(optional)*
Blank	None
PN	Port only, no gauge
PO	Port with 60 PSI gauge
P1	Port with 100 PSI gauge
P2	Port with 200 PSI gauge
P6	Port with 600 PSI gauge

8	PANEL MOUNTING NUT *(optional)*
Blank	None
N	Nut

Viton® is a registered trademarks of E.I.duPont de Nemours and Company
Contact factory for material certifications. Fees may apply.

DOME LOADED BIAS SPRING DIAPHRAGM SENSED

Back Pressure Regulators

2100DLB SERIES

PREMIER INDUSTRIES

1590 99th Ln NE,
Minneapolis, MN 55449
763-786-4020

MADE IN THE USA

Minneapolis, MN

DESCRIPTION

Premier 2100DLB Series dome loaded/bias spring, single stage, diaphragm sensed, back pressure regulators, are designed for load pressures up to 500 PSIG (34.47 bar) with a bias spring up to 100 psig (6.89 bar) and Cv 0.14 or 0.20. 2100DLB Series regulators are elastomer free and designed for use in tracking applications.

FEATURES

- Compatible with electro pneumatic controllers
- Elastomer free
- Designed for tracking applications
- Cv 0.14 or 0.20

The Premier 2100DLB Series pressure reducing regulator's design is remarkably flexible.
Contact Premier Industries for a custom 2100DLB Series regulator to meet your exact needs.

2100DLB SERIES

DOME LOADED BIAS SPRING DIAPHRAGM SENSED

Back Pressure Regulators

SPECIFICATIONS

- **MAXIMUM LOAD PRESSURE:** 500 PSIG *(34.47 bar)*
- **PRESET SPRING BIAS:** up to 100 PSIG *(6.89 bar)*
- **FLOW (Cv):** 0.14, or 0.20

MATERIALS OF CONSTRUCTION

- **BODY:**
  - 316 Stainless Steel
- **DIAPHRAGM:**
  - Eligloy®
- **VALVE SEAT:**
  - PCTFE
- **SEALS:**
  - PTFE
- **OTHER WETTED MATERIALS:**
  - 316 Stainless Steel
  - 303 Stainless Steel

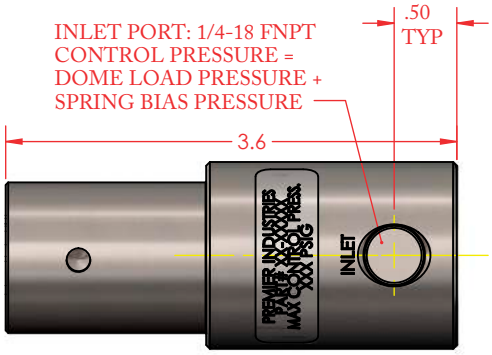

PORTING

- **INLET:**
  - 1/4" FNPT
- **OUTLET:**
  - 1/4" FNPT
- **LOAD PORT:**
  - 1/4" FNPT

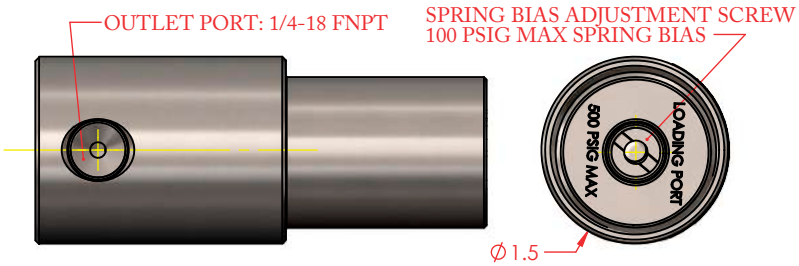

OPTIONS

- Private label
- Gauges

(Part number 50-12474 shown above)

Elgiloy" is a registered trademark of Elgiloy Specialty Metals Division, Combined Metals of Chicago L.L.C.

DOME LOADED BIAS SPRING DIAPHRAGM SENSED

Back Pressure Regulators

2100DLB SERIES

PART #	-	1	2	3	-	XXX
50-12474	-				-	

1	WETTED MATERIALS
1	316 Stainless Steel
2	303 Stainless Steel
2	**PORTING OPTIONS**
1	'S' Porting, no gauges 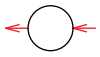
3	**MAIN VALVE Cv**
1	Cv 0.14
2	Cv 0.20

XXX	PRESET SPRING BIAS
Specify 0-100. Pressure units are psig. (EX: specify '30' for 30 psig spring bias pressure.) Preset spring bias pressure is field adjustable by qualified technicians only.	

HIGH SENSITIVITY LOW PRESSURE, HIGH FLOW

Back Pressure Regulators

2400 SERIES

PREMIER INDUSTRIES

1590 99th Ln NE,
Minneapolis, MN 55449
763-786-4020

MADE IN THE USA

Minneapolis, MN

DESCRIPTION

Premier 2400 series low pressure, high flow, back pressure regulators are highly sensitive; they are capable of controlling pressures down to 1 PSIG (*0.07 bar)*. These precision, diaphragm sensed, back pressure regulators are useful for numerous R&D controls, industrial controls, monitors, and systems. 2400 Series regulators feature a flow capacity of Cv 0.6, Viton® diaphragm with stainless steel liner, and a controlled pressure range of 0-25 PSIG *(0-1.72 bar) (other pressures available upon request)*. Premier 2400 series regulators are capable of regulating a broad range of media as compatible with their materials of construction.

FEATURES

- Flow Capacity (Cv): 0.6
- Compact size
- Viton® diaphragm with stainless steel liner
- Very competitive pricing
- Machined bar stock body, and bonnet eliminates porosity found in castings
- Models are available for both corrosive and non-corrosive service

The Premier 2400 Series pressure reducing regulator's design is remarkably flexible. Contact Premier Industries for a custom 2400 Series regulator to meet your exact needs.

2400 SERIES

HIGH SENSITIVITY LOW PRESSURE, HIGH FLOW

Back Pressure Regulators

SPECIFICATIONS

- **CONTROLLED PRESSURE RANGE:** 0-25 PSIG *(0-1.72 bar)*
  (other pressures available upon request)
- **FLOW (Cv):** 0.6

MATERIALS OF CONSTRUCTION

- **BONNET:**
  - 6061-T6 Aluminum, Nickel Plated
- **BODY:**
  - 303 Stainless Steel
  - 6061-T6 Aluminum, Nickel Plated
- **DIAPHRAGM OPTIONS:**
  - Viton® with 316 Stainles Steel liner
- **MAIN VALVE SEAT:**
  - Viton®

PORTING

- **STANDARD INLET:**
  - 1/4-18 FNPT
- **OPTIONAL INLETS:**
  - *available upon request*
- **STANDARD OUTLET:**
  - 1/4-18 FNPT
- **OPTIONAL OUTLETS:**
  - *available upon request*

OPTIONAL ITEMS

- Gauges
- Hand knob
- Panel mounting bonnet & nuts
- Tamper resistant acorn nut
- New dome loaded design *(P/N 50-12671)*
- Private label

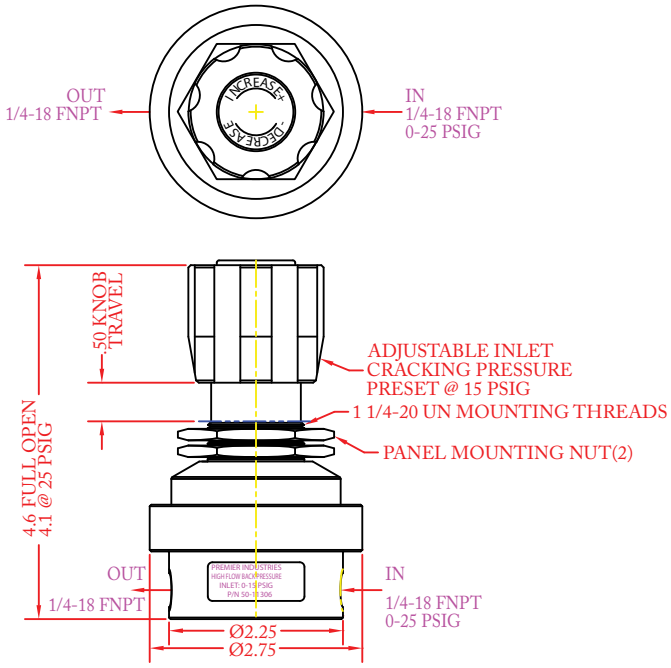

(Part number shown above: 50-11306)

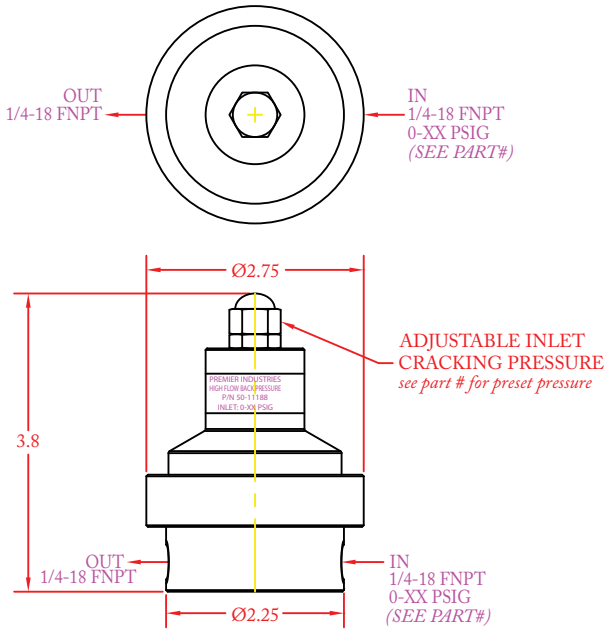

(Part number shown above: 50-11188)

Viton® is a registered trademark of E.I.duPont de Nemours and Company
Contact factory for material certifications. Fees may apply.

DOME LOADED HIGH SENSITIVITY LOW PRESSURE, HIGH FLOW

Back Pressure Regulators

2400DL SERIES

PREMIER INDUSTRIES

1590 99th Ln NE,
Minneapolis, MN 55449
763-786-4020

MADE IN THE USA

Minneapolis, MN

DESCRIPTION

Premier 2400DL series dome loaded, low pressure, high flow, back pressure regulators are fitted with a large Viton® diaphragm for increased sensitivity. These precision, back pressure regulators feature a cracking pressure of 0-75 PSIG *(0-5.17 bar),* 1.3 to 1 dome load, and Cv 0.6. Premier 2400DL series regulators are capable of regulating a broad range of media as compatible with their materials of construction.

FEATURES

- Flow Capacity (Cv): 0.6
- Cracking pressure: 0-75 PSIG *(0-5.17 bar)*
- Viton® diaphragm
- 1.3 to 1 dome load
- Compact size
- Machined bar stock body, and bonnet eliminates porosity found in castings
- Models are available for both corrosive and non-corrosive service

The Premier 2400DL Series pressure reducing regulator's design is remarkably flexible.
Contact Premier Industries for a custom 2400DL Series regulator to meet your exact needs.

2400DL SERIES

DOME LOADED HIGH SENSITIVITY LOW PRESSURE, HIGH FLOW

Back Pressure Regulators

SPECIFICATIONS

- **CRACKING PRESSURE:** 0-75 PSIG *(0-5.17 bar)*
- **FLOW (Cv):** 0.6

MATERIALS OF CONSTRUCTION

- **BONNET:**
  - 6061-T6 Aluminum, Nickel Plated
- **BODY:**
  - 303 Stainless Steel
- **DIAPHRAGM OPTIONS:**
  - Viton®
- **MAIN VALVE SEAT:**
  - Viton®

PORTING

- **STANDARD INLET:**
  - 1/4-18 FNPT
- **STANDARD OUTLET:**
  - 1/4-18 FNPT
- **LOAD PORT:**
  - 1/4-18 FNPT

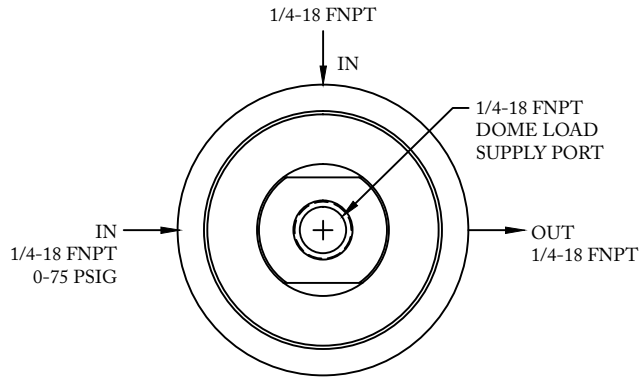

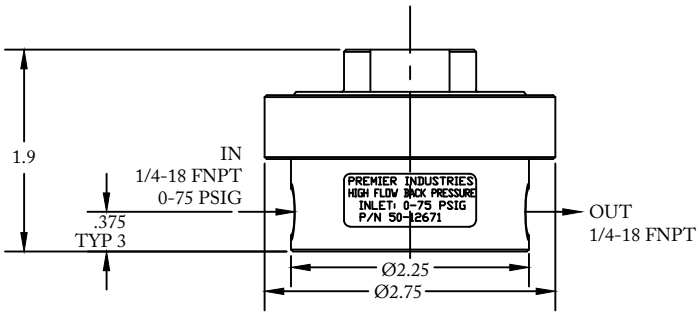

(Part number shown above: 50-12671)

OPTIONAL ITEMS

- Private label

Viton® is a registered trademark of E.I.duPont de Nemours and Company

Contact factory for material certifications. Fees may apply.

HIGH PRESSURE PISTON SENSED

Back Pressure Regulators

3100 SERIES

PREMIER INDUSTRIES

1590 99th Ln NE,
Minneapolis, MN 55449
763-786-4020

MADE IN THE USA

Minneapolis, MN

DESCRIPTION

The high pressure Premier 3100 Series are single stage, piston sensed, variable control pressure regulators, rated for inlet and outlet pressures up to 10000 PSIG *(689.5 bar)* and Cv 0.03, 0.06, 0.14 or 0.20.

They are used to regulate to a broad range of non-corrosive and corrosive media (based on materials of construction) Premier 3100 Series regulators can be supplied with a wide range of inlet and outlet configurations.

FEATURES

- Inlet/outlet pressures up to 10000 PSIG *(689.48 bar)* max
- Cv: 0.03, 0.06, 0.14, or 0.20
- Economical pricing
- Multiple mounting options *(bracket / panel nuts)*
- Machined bar stock body, bonnet and piston eliminates porosity found in castings
- Numerous materials & optional features available.

The Premier 3100 Series pressure reducing regulator's design is remarkably flexible. Contact Premier Industries for a custom 3100 Series regulator to meet your exact needs.

3100 SERIES

HIGH PRESSURE PISTON SENSED
Back Pressure Regulators

SPECIFICATIONS

- **MAXIMUM INLET PRESSURE (brass):** 6000 PSIG *(413.69 bar)*
- **MAXIMUM INLET PRESSURE (SS):** 10000 PSIG *(689.48 bar)*
- **CONTROL PRESSURE RANGES:**
  - 5-500 PSIG *(0.34 - 34.5 bar)*
  - 5-800 PSIG *(0.34 - 55.16 bar)*
  - 10-1500 PSIG *(0.69 - 103.42 bar)*
  - 15-2500 PSIG *(1.03 - 172.37 bar)*
  - 25-4000 PSIG *(1.72- 275.79 bar)*
  - 50-6000 PSIG *(3.45 - 413.69 bar)*
  - 100-10000 PSIG*(6.89- 689.48 bar)*
- **FLOW (Cv):** 0.03, 0.06, 0.14 or 0.2
- **AMBIENT OPERATING TEMP** **:
  - -15°F/-26°C to 165°F/74°C (BUNA-N)
  - -4°F/-20°C to 165°F/74°C (Viton®)
  - -65°F/-54°C to 165°F/74°C (EPDM)
  - 0°F/-17°C to 165°F/74°C (KALREZ®)
  - 15°F/-9°C to 165°F/74°C (ALFAS)
  - -50°F/-45°C to 165°F/74°C (Nitrile, Lo-temp)

MATERIALS OF CONSTRUCTION

- **BODY & BONNET OPTIONS**:
  - 316 Stainless Steel and 17-4 Stainless Steel
  - SAE 360 Brass
- **VALVE SEAT OPTIONS**:
  - Vespel®
  - PEEK®
  - PCTFE *see page 3 for special instructions*
- **MAIN VALVE STEM**:
  - 17-4 Stainless Steel
- **SEALS**:
  - Viton®
  - BUNA-N
  - EPDM
  - KALREZ® *(Contact factory for pricing)*
  - Nitrile, Lo-temp
- **BACK-UP RINGS**:
  - PTFE
  - PCTFE
- **WETTED, OTHER**:
  - 316 Stainless Steel
  - 17-4 Stainless Steel

PORTING

- **INLET & OUTLET PORT OPTIONS:**
  - 1/4" FNPT, SAE J1926, SAE AS5202**, NPTF or medium pressure
  - 3/8" FNPT, SAE J1926, SAE AS5202**, NPTF or medium pressure
  - 1/2" FNPT, SAE J1926, SAE AS5202**, or NPTF
  - 9/16" medium pressure
  - 3/4" FNPT, SAE J1926, SAE AS5202**, NPTF or medium pressure
- **GAUGE PORTS:** 1/4" FNPT

OPTIONS

- Gauges
- Private label
- Surface mount
- Panel mounting bracket: *P/N: 30-10059 (Ø2.15 panel hole)*
- Panel mounting nuts: *P/N: 30-10189 (Ø2.28 panel hole)*

PANEL NUT STYLE

PANEL MOUNTING BRACKET STYLE

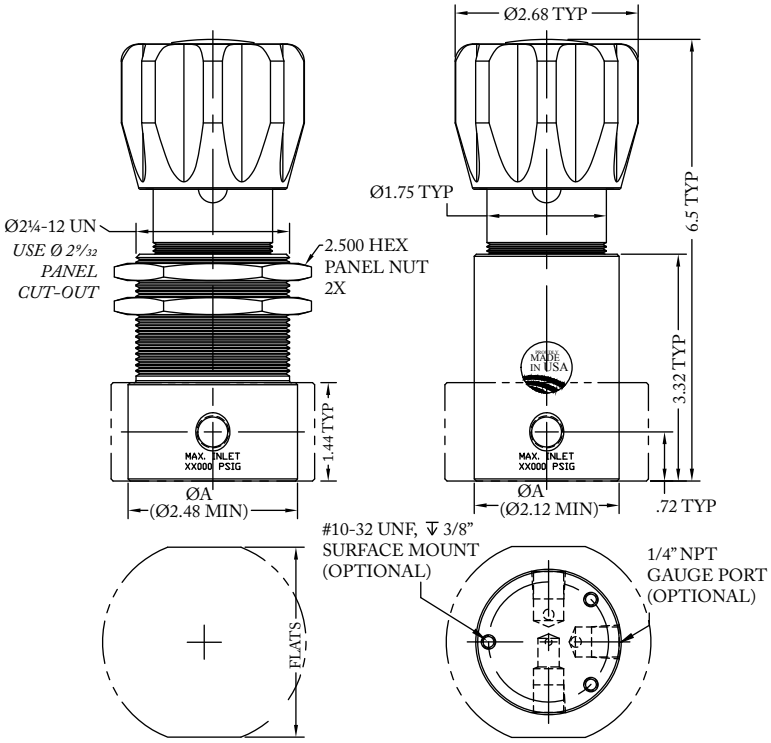

(Part number: 30-10066G shown above)

PANEL NUT BODY		
PORT TYPE	ØA	FLATS
NPT, NPTF	Ø2.48	——
1/4" OTHER	Ø2.48	2.36
3/8" M.P.	Ø2.48	2.36
3/8" SAE	Ø2.73	2.58
1/2" SAE	Ø2.98	2.78
9/16" M.P.	Ø2.98	2.78

MOUNTING BRACKET BODY		
PORT TYPE	ØA	FLATS
1/4 & 3/8 NPT,NPTF	Ø2.12	——
1/4" M.P.	Ø2.12	1.98
1/2" NPT, NPTF	Ø2.48	——
1/4" SAE	Ø2.48	2.36
3/8" M.P.	Ø2.48	2.36
3/8" SAE	Ø2.73	2.58
1/2" SAE	Ø2.98	2.81
9/16" M.P.	Ø2.98	2.81
3/4" NPT, NPTF	Ø2.98	——

***SAE AS5202 supersedes MS33649*

Vespel® Kalrez® & Viton® are registered trademarks of E.I.duPont de Nemours and Company

PEEK® is a registered trademark of Victrex PLC

***Lower temperature compounds are available, Above temperature ranges will apply to the majority of media for which the material is recommended. Temperature ranges can vary with some media, ALWAYS TEST UNDER SERVICE CONDITIONS.*

HIGH PRESSURE PISTON SENSED

Back Pressure Regulators

3100 SERIES

PART #	1 2	-	3	4	5	6	7	-	8	9 10	MODS
30-10066G		-						-			

316 Stainless Steel body and 17-4 Stainless Steel bonnet standard

1 2	MOUNTING STYLE
MB	Mounting bracket style body
PN	Panel nut style body *(panel nuts included)*

3	OUTLET PRESSURE
1	5-500 PSIG *(0.34-34.5 Bar)*
2	5-800 PSIG *(0.34-55.2 Bar)*
3	10-1500 PSIG *(0.69-103.4 Bar)*
4	15-2500 PSIG *(1.0-172.4 Bar)*
5	25-4000 PSIG *(1.7-275.8 Bar)*
6	50-6000 PSIG *(3.4-413.7 Bar)*
7	100-10000 PSIG *(6.9-689.5 Bar) (stainless steel only)*

4	MAIN VALVE Cv
A	Cv 0.03
0	Cv 0.06
1	Cv 0.14
2	Cv 0.20

5	PORTING CONFIG.
H	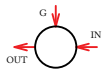
S	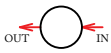 *(standard)*

6	PORT SIZE
4	1/4”
6	3/8”
8	1/2”*
9	9/16”**
T	3/4”

**1/2” ports not available in medium pressure*
***9/16” ports only available in medium pressure*

Gauge ports: 1/4” FNPT

7	PORT TYPE *IN/OUT*
1	NPT
2	SAE J1926
3	SAE AS5202 (MS33649**)
4	MEDIUM PRESSURE
6	NPTF

***SAE AS5202 supersedes MS33649*

8	VALVE SEAT
0	Vespel®
3	PEEK®
4	PCTFE*** *see table below*

**** PCTFE SEATS*	*MAX CONTROL PRESSURE*
Cv 0.03, 0.06	*6000 PSIG*
Cv 0.14	*4000 PSIG*
Cv 0.20	*3000 PSIG*

PCTFE SEAT MAXIMUM CONTROL PRESSURES SUPERCEDE BODY MATERIAL MAXIMUM CONTROL PRESSURES

9 10	O-RINGS
00	BUNA-N
01	AFLAS®
02	VITON®
05	EPDM
11	KALREZ® *(Contact factory for pricing)*
12	NITRILE, LO-TEMP

MODIFICATIONS

Separate multiple mods with a dash

N	NACE MR0175 compatible option
B	SAE 360 Brass body & bonnet *(6000 psig / 413.69 bar max)*
SM	Surface mount *Surface mounting holes: pattern dependant on port type & configuration*

NOTE MAXIMUM CONTROL PRESSURE: The end user is responsible to ensure adequate fittings are used to connect regulator to plumbing.

Kalrez® & Viton® are registered trademarks of E.I.duPont de Nemours and Company. Kel-F® is a registered trademark of 3M Company
AFLAS® is a registered trademark of Asahi Glass Co., Ltd

Contact factory for material certifications. Fees may apply.

AIR LOADED HIGH PRESSURE
Back Pressure Regulators

3100AL SERIES

PREMIER INDUSTRIES

1590 99th Ln NE,
Minneapolis, MN 55449
763-786-4020

MADE IN THE USA
Minneapolis, MN

DESCRIPTION

The Premier 3100AL Series air loaded, piston sensed, single stage, high pressure, back pressure regulators feature control pressures up to 10000 PSIG *(689.48 bar)*, and Cv 0.03, 0.06, 0.14, or 0.2. Premier 3100AL Series regulators are used to regulate to a broad range of non-corrosive and corrosive media *(based on materials of construction)*.

FEATURES

- Compatible with electro pneumatic controllers
- Cv 0.03, 0.06, 0.14, or 0.2
- Control pressures up to 10000 PSIG *(689.48 bar)*
- Machined bar stock body, bonnet and piston eliminates porosity found in castings
- Numerous optional features are available
- Hydraulic design available

The Premier 3100AL Series back pressure regulator's design is remarkably flexible.
Contact Premier Industries for a custom Premier 3100AL Series regulator to meet your exact needs.

3100AL SERIES

AIR LOADED HIGH PRESSURE
Back Pressure Regulators

SPECIFICATIONS

- **MAXIMUM INLET PRESSURE:**
  - REGULATOR: 10000 PSIG / 689.5 bar *(316 Stainless Steel)*
    6000 PSIG / 689.5 bar *(SAE 360 Brass)*
  - AIR ACTUATOR: 100 PSIG *(6.89 bar)*
- **CONTROL PRESSURE RANGES:**
  - 10-1500 PSIG *(0.69 - 103.42 bar)*
    Diameter: 1.000"
    Area: 0.7854 in²
    *Ratio: 16/1 ***
  - 15-2500 PSIG *(1.03 - 172.37 bar)*
    Diameter: 0.750"
    Area: 0.4418 in²
    *Ratio: 28/1 ***
  - 50-6000 PSIG *(3.45 - 413.69 bar)*
    Diameter: 0.500"
    Area: 0.1964 in²
    *Ratio: 64/1 ***
  - 100-10000 PSIG *(6.89 - 689.5 bar)*
    Diameter: 0.375"
    Area: 0.1104 in²
    *Ratio: 114/1 ***

*** 4.0" diameter diaphragm*
Diaphragm area: 12.5664 in²

- **FLOW (Cv):** 0.03, 0.06, 0.14, or 0.20

MATERIALS OF CONSTRUCTION

- **BODY OPTIONS**:
  - SAE 360 brass
  - 316 Stainless Steel
- **HOUSING, AIR ACTUATOR :**
  - 6061-T6 Aluminum/clear anodized
- **DIAPHRAGM, AIR ACTUATOR :**
  - Neoprene, nylon fabric-reinforced
- **MAIN VALVE STEM:** 316 Stainless Steel
- **MAIN VALVE SEAT OPTIONS:**
  - Vespel®
  - PEEK®
- **ELASTOMER SEAL OPTIONS:**
  - BUNA-N
  - Viton-A®
  - EPDM
  - Kalrez® *(Contact factory for pricing)*
- **WETTED PARTS:**
  - 316 Stainless Steel
  - 17-4 Stainless Steel
- **BACK-UP RINGS:**
  - PTFE
  - PCTFE

PORTING

- **INLET/OUTLET**
  - 1/4", 3/8", 1/2" FNPT
  - 1/4", 3/8", 1/2" SAE J1926
  - 1/4", 3/8", 1/2" SAE AS5202 *(MS33649**)*
  - 1/4", 3/8", 9/16" MEDIUM PRESSURE
  - 1/4", 3/8", 1/2" NPTF
- **AIR ACTUATOR**:
  - 1/4-18" FNPT *(Standard)*
  - 1/4" SAE AS5202 *(mod)*
  - 1/4" SAE J1926 *(mod)*
  - 1/8" FNPT *(mod)*

OPTIONAL ITEMS

- Panel mounting bracket: *P/N: 30-10059*
  (Ø2.15 panel hole)
- Surface mount
- Private label

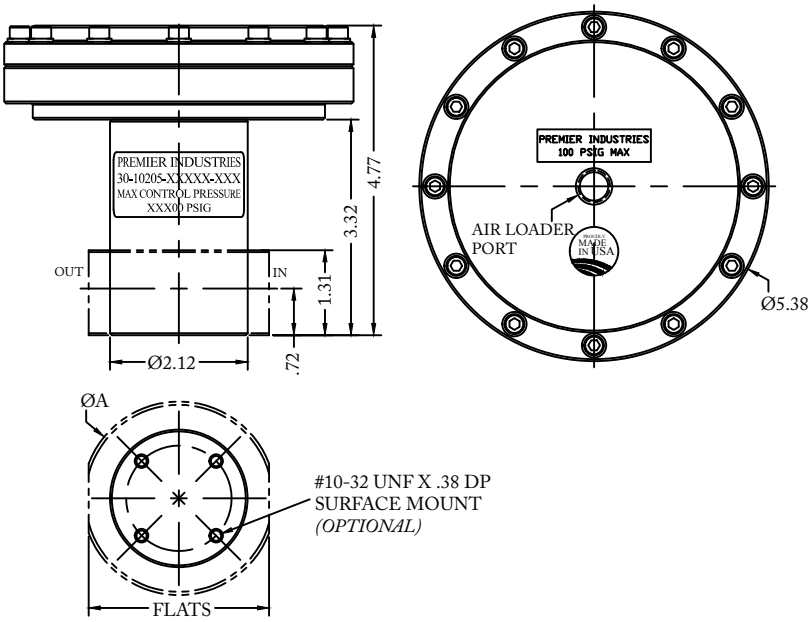

(Part number: 30-10205G shown above)

BODY DIMENSIONS		
PORT TYPE	ØA	FLATS
1/4 & 3/8 NPT	Ø2.12	——
1/4" M.P.	Ø2.12	1.98
1/2" NPT, NPTF	Ø2.48	——
1/4" SAE	Ø2.48	2.36
3/8" M.P.	Ø2.48	2.36
3/8" SAE	Ø2.73	2.58
1/2" SAE	Ø2.98	2.81
9/16" M.P.	Ø2.98	2.81

***SAE AS5202 supersedes MS33649*
Viton® and Vespel® are registered trademarks of E.I.duPont de Nemours and Company
PEEK® is a registered trademark of Victrex PLC

AIR LOADED HIGH PRESSURE
Back Pressure Regulators

3100AL SERIES

PART #	-	1	2	3	4	5	-	6	7 8	-	MODS
30-10205G	-						-			-	

1	BODY MATERIALS *(MAX. INLET PRESSURE)*
1	SAE 360 Brass *(6000 psig / 413.7 bar)*
2	316 Stainless Steel *(10000 psig / 689.5 bar)*

2	CONTROL PRESSURE	
3	10-1500 psig *(0.69-103.4 bar)*	*Diameter: 1.000" Area: 0.7854 in² Ratio: 16/1 ***
4	15-2500 psig *(1.0-172.4 bar)*	*Diameter: 0.750" Area: 0.4418 in² Ratio: 28/1 ***
6	50-6000 psig *(3.4-413.7 bar)*	*Diameter: 0.500" Area: 0.1964 in² Ratio: 64/1 ***
7	100-10000 psig *(6.9-689.5 bar) (stainless steel only)*	*Diameter: 0.375" Area: 0.1104 in² Ratio: 114/1 ***

*** 4.0" diameter diaphragm*
Diaphragm area: 12.5664 in²

3	FLOW (Cv)
A	Cv 0.03
0	Cv 0.06
1	Cv 0.14
2	Cv 0.2

4	PORT SIZE
4	1/4"
6	3/8"
8	1/2"*
9	9/16"**

**1/2" not available in medium pressure*
***9/16" only available in medium pressure*

5	PORT TYPE
1	FNPT
2	SAE J1926
3	SAE AS5202 *(MS33649**)*
4	MEDIUM PRESSURE
6	NPTF

***SAE AS5202 supersedes MS33649*

6	VALVE SEAT
0	Vespel®
3	PEEK®

7 8	O-RING MATERIAL
00	BUNA-N
02	VITON-A®
05	EPDM
11	KALREZ® *(Contact factory for pricing)*

MODIFICATIONS *Separate multiple mods with a dash*	
BLANK	NONE
AS	1/4" SAE AS5202 LOADER PORT
E	1/8" NPT AIR LOADER PORT
J	1/4" SAE J1926 LOADER PORT
SM	SURFACE MOUNT

10000 PSIG MAX INLET (Stainless Steel)
6000 PSIG MAX INLET (Brass)
The end user is responsible to ensure adequate fittings are used to connect regulator to plumbing.

Viton-A® and Vespel® are registered trademarks of E.I.duPont de Nemours and Company
PEEK® is a registered trademark of Victrex PLC

Contact factory for material certifications. Fees may apply.

DOME LOADED HIGH PRESSURE
Back Pressure Regulators

3100DL SERIES

PREMIER INDUSTRIES

1590 99th Ln NE,
Minneapolis, MN 55449
763-786-4020

MADE IN THE USA
Minneapolis, MN

DESCRIPTION

The Premier 3100DL Series dome loaded, piston sensed, single stage, high pressure, back pressure regulators feature control pressures up to 10000 PSIG *(413.69 bar)*, and Cv 0.06, 0.14, or 0.2. Premier 3100DL Series regulators are used to regulate to a broad range of non-corrosive and corrosive media *(based on materials of construction)*.

FEATURES

- Compatible with electro pneumatic controllers
- 1:1 dome load
- Cv 0.06, 0.14, or 0.2
- Control pressures up to 10000 PSIG *(413.69 bar)*
- Very competitive pricing
- Machined bar stock body, bonnet and piston eliminates porosity found in castings
- Hydraulic versions available
- Designs available with bias spring

The Premier 3100DL Series back pressure regulator's design is remarkably flexible.
Contact Premier Industries for a custom Premier 3100DL Series regulator to meet your exact needs.

3100DL SERIES

DOME LOADED HIGH PRESSURE

Back Pressure Regulators

SPECIFICATIONS

- **MAXIMUM INLET PRESSURE:**
  - REGULATOR: 6000 PSIG (*413.69 bar)*
  - DOME LOAD: 6000 PSIG (*413.69 bar)*
- **MAXIMUM CONTROL PRESSURE:**
  - 6000 PSIG (*413.69 bar)*
- **FLOW (Cv):** 0.06, 0.14, or 0.20

MATERIALS OF CONSTRUCTION

- **BODY OPTIONS**:
  - SAE 360 Brass
  - 316 Stainless Steel
- **BONNET OPTIONS**:
  - SAE 360 Brass
  - 303 Stainless Steel
- **MAIN VALVE SEAT:**
  - Vespel®
- **ELASTOMER SEAL OPTIONS:**
  - BUNA-N
  - Viton®
  - EPDM
  - Kalrez® *(Contact factory for pricing)*
- **WETTED PARTS:**
  - 300 Series Stainless Steel
  - 17-4 Stainless Steel

PORTING

- **INLET/OUTLET OPTIONS**
  - 1/4", 3/8" FNPT
  - 1/4", 3/8" SAE J1926
  - 1/4", 3/8" SAE AS5202 (MS33649**)
- **LOAD PORT**: 1/8" FNPT

OPTIONAL ITEMS

- Private label
- Load port orientation
- Bias spring

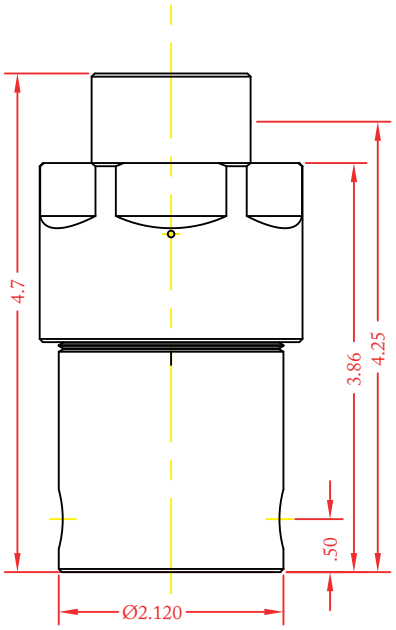

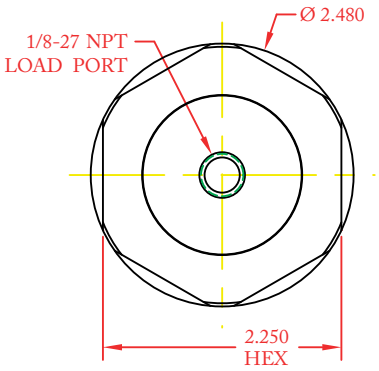

(Part number: 30-10211DG shown above)

***SAE AS5202 supersedes MS33649*

Kalrez® Vespel® & Viton® are registered trademarks of E.I.duPont de Nemours and Company

DOME LOADED HIGH PRESSURE
Back Pressure Regulators

3100DL SERIES

SERIES	-	1	2	3	4	-	5 6	-	7
30-10211DG	-					-		-	

1	BODY MATERIALS *(MAX. INLET PRESSURE)*
1	SAE 360 Brass Body & Bonnet *(6,000 psig / 413.7 bar)*
2	316 Stainless Steel Body, 303 Stainless steel Bonnet *(10,000 psig / 689.5 bar)*
2	**FLOW (Cv)**
0	Cv 0.06
1	Cv 0.14
2	Cv 0.2
3	**PORT SIZE**
4	1/4”
6	3/8”
DOME PORT: 1/8-27 FNPT	

4	PORT TYPE
1	FNPT
2	SAE J1926
3	SAE AS5202 (MS33649**)
***SAE AS5202 supersedes MS33649*	
5 6	**O-RING MATERIAL**
00	BUNA-N
02	VITON®
05	EPDM
11	KALREZ® *(Contact factory for pricing)*

7	VALVE SEAT
0	Vespel®

6000 PSIG MAX INLET

The end user is responsible to ensure adequate fittings are used to connect regulator to plumbing.

Kalrez® Vespel® & Viton® are registered trademarks of E.I.duPont de Nemours and Company

Contact factory for material certifications. Fees may apply.

HIGH PRESSURE 15000 PSIG

Back Pressure Regulators

3123 SERIES

PREMIER INDUSTRIES

1590 99th Ln NE,
Minneapolis, MN 55449
763-786-4020

MADE IN THE USA

Minneapolis, MN

DESCRIPTION

High pressure Premier 3123 Series back pressure regulators are single stage, piston sensed, variable control pressure regulators, rated for inlet pressures up to 15000 PSIG *(1034.21 bar)* with a control pressure range of 300-15000 PSIG *(20.68 - 1034.21 bar)*. For optimum compatibility with your desired application, we offer a choice of two seat materials: Vespel® and PEEK®. The 3123 Series regulator features a low torque hand knob for smooth adjustments.

FEATURES

- Rated for pressures up to 15000 PSIG *(1034.21 bar)*
- Flow capacity (Cv): 0.06, 0.14, or 0.20
- Low torque ball bearing hand knob
- Very competitive pricing
- Machined bar stock body, bonnet and piston eliminates porosity found in castings
- Numerous optional features are available.

The Premoer 3123 Series pressure reducing regulator's design is remarkably flexible.
Contact Premier Industries for a custom 3123 Series regulator to meet your exact needs.

3123 SERIES

HIGH PRESSURE 15000 PSIG

Back Pressure Regulators

SPECIFICATIONS

- **MAXIMUM INLET PRESSURE:** 15000 PSIG *(1034.21 bar)*
- **CONTROL PRESSURE RANGE:**
  - 300-15000 PSIG *(20.68 - 1034.21 bar)*
- **FLOW (Cv):** 0.06, 0.14, or 0.20
- **OPERATING TEMPERATURE:**
  - -15°F/-26°C to 165°F/74°C (BUNA-N)
  - -4°F/-20°C to 165°F/74°C (VITON-A®)
  - -65°F/-54°C to 165°F/74°C (EPDM)
  - 15°F/-9°C to 165°F/74°C (AFLAS)
  - -65°F/-54°C to 165°F/74°C (NITRILE)

MATERIALS OF CONSTRUCTION

- **BODY** :
  - 316 Stainless Steel,
- **BONNET**:
  - 17-4 Stainless Steel
- **WETTED PARTS, OTHER**:
  - 316 Stainless Steel
  - 17-4 Stainless Steel
  - PH15-7Mo Stainless Steel
- **O-RINGS:**
  - BUNA-N
  - AFLAS®
  - Viton-A®
  - EPDM
  - KALREZ® *(Contact factory for pricing)*
  - Nitrile, Lo-temp
- **BACK-UP RINGS**: PTFE or PCTFE
- **VALVE SEAT**:
  - Vespel®
  - PEEK®

PORTING

- **INLET/OUTLET PORTING OPTIONS**:
  - 1/4", 3/8" FNPT
  - 1/4", 3/8", 9/16" Medium pressure
  - 1/4", 3/8" High pressure

OPTIONAL ITEMS

- Inlet gauge
- Private label
- Panel mounting bracket: *P/N: 30-10059 (Ø2.15 panel hole)*

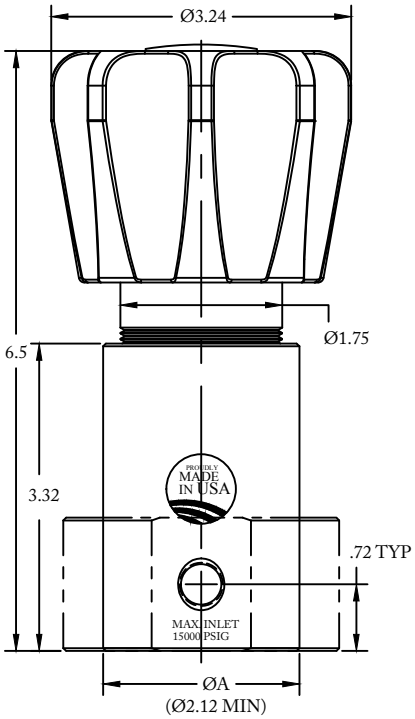

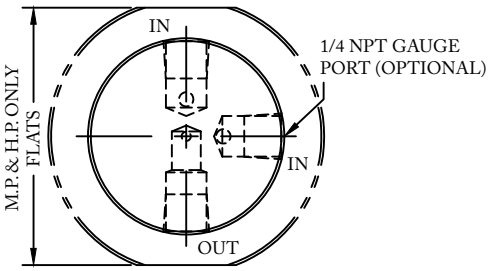

Part number shown above: 30-10223

BODY DIMENSIONS		
PORT TYPE	ØA	FLATS
1/4 & 3/8 NPT	Ø2.12	——
1/4" M.P. & H.P	Ø2.12	1.98
3/8" M.P.	Ø2.48	2.36
3/8" H.P.	Ø2.98	2.78
9/16" M.P.	Ø2.98	2.78

Vespel® Kalrez® & Viton® are registered trademarks of E.I.duPont de Nemours and Company
AFLAS® is a regestered trademark of the Asahi Glass Co., Ltd.
PEEK® is a registered trademark of Victrex PLC

HIGH PRESSURE
15000 PSIG
Back Pressure Regulators

3123 SERIES

SERIES	-	1	2	3	4	5	-	6 7	-	8
30-10223G	-						-		-	

1	OUTLET PRESSURE
8	300-15000 PSIG *20.68-1034.21 Bar*
2	**PORTING CONFIGURATION**
H	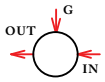
S	
3	**PORT SIZE**
4	1/4”
6	3/8”
9	9/16” *(Only available in medium pressure)*

4	PORT TYPE *(1/4” FNPT gauge port)*
1	FNPT
4	Medium Pressure
5	High Pressure
5	**VALVE SEAT**
0	Vespel®
3	PEEK®

6 7	O-RINGS
00	BUNA-N
01	AFLAS®
02	VITON®
05	EPDM
11	KALREZ® *(Contact factory for pricing)*
12	Nitrile, Low-temp
8	**Cv (FLOW)**
0	0.06
1	0.14
2	0.20

15000 PSIG MAX INLET
The end user is responsible to ensure adequate fittings are used to connect regulator to plumbing.

Kalrez® Vespel® & Viton® are registered trademarks of E.I.duPont de Nemours and Company
AFLAS® is a registered trademark of the Asahi Glass Co., Ltd. PEEK® is a registered trademark of Victrex PLC

Contact factory for material certifications. Fees may apply.

HIGH PRESSURE AIR LOADED 15000 PSIG

Back Pressure Regulators

3123AL SERIES

PREMIER INDUSTRIES

1590 99th Ln NE,
Minneapolis, MN 55449
763-786-4020

MADE IN THE USA

Minneapolis, MN

DESCRIPTION

The high pressure, air loaded, Premier 3123AL Series back pressure regulators are single stage, piston sensed regulators, designed for inlet and outlet pressures up to 15000 PSIG *(1034.21 bar)* and Cv 0.06, 0.14, or 0.20.

Premier 3123AL Series Regulators are designed for compatibility with electropneumatic controllers, enabling piloted pressure control from an inert gas at low pressures *(100 psig / 6.89 bar max air load)*.

Premier 3123AL Series regulators are used to regulate a broad range of non-corrosive and corrosive media (based on materials of construction).

FEATURES

- Compatible with electro-pneumatic controllers
- 15000 PSIG *(1034.21 bar)* MAX
- Cv 0.06, 0.14, or 0.20
- Economical pricing
- Machined bar stock body, bonnet and piston eliminates porosity found in castings

The Premier 3123 Series pressure reducing regulator's design is remarkably flexible. Contact Premier Industries for a custom 3123 Series regulator to meet your exact needs.

3123AL SERIES

HIGH PRESSURE AIR LOADED 15000 PSIG

Back Pressure Regulators

SPECIFICATIONS

- **MAX INLET PRESSURE:**
  - REGULATOR: 15000 PSIG / 1034.21 bar *(stainless steel)*
  - AIR ACTUATOR: 100 PSIG (*6.89 bar)*
- **CONTROL PRESSURE RANGES:**
  - 300-15000 PSIG *(20.68 - 1034.21 bar)*
    Diameter: 0.312"
    Area: 0.0765 in²
    *Ratio: 164/1 ***

*** 4.0" diameter diaphragm*
Diaphragm area: 12.5664 in²

- **FLOW (Cv):** 0.06, 0.14, or 0.20
- **OPERATING TEMPERATURE:**
  - -15°F/-26°C to 165°F/74°C (BUNA-N)
  - -4°F/-20°C to 165°F/74°C (Viton®)
  - -65°F/-54°C to 165°F/74°C (EPDM)
  - 0°F/-17°C to 165°F/74°C (KALREZ®)
  - 15°F/-9°C to 165°F/74°C (ALFAS)
  - -50°F/-45°C to 165°F/74°C (Nitrile, Low-temp)

MATERIALS OF CONSTRUCTION

- **BODY OPTIONS** :
  - 316 Stainless Steel
- **HOUSING, AIR ACTUATOR**:
  - 6061-T6 Aluminum, Clear Anodized
- **DIAPHRAGM, AIR ACTUATOR**:
  - Neoprene, nylon reinforced
- **WETTED PARTS, OTHER**:
  - 316 Stainless Steel,
  - 17-4 Stainless Steel
  - PH15-7Mo Stainless Steel
- **O-RING SEALS**:
  - Buna-N
  - Aflas®
  - Viton®
  - EPDM
  - Kalrez® *(Contact factory for pricing)*
  - Nitrile, low-temperature
- **BACK-UP RINGS**: PTFE, PCTFE
- **MAIN VALVE SEAT**:
  - Vespel®
  - 17-4 H900 Stainless Steel
  - 316 Stainless Steel
  - PEEK®

PORTING

- **INLET PORTING**:
  - 1/4" FNPT, medium pressure, high presssure
  - 3/8" FNPT, medium pressure, high presssure
  - 9/16" medium pressure
- **OUTLET PORTING**:
  - 1/4" FNPT, medium pressure, high presssure
  - 3/8" FNPT, medium pressure, high presssure
  - 9/16" medium pressure

OPTIONS

- Gauges
- Private label
- Panel mounting bracket: *P/N: 30-10059 (Ø2.15 panel hole)*

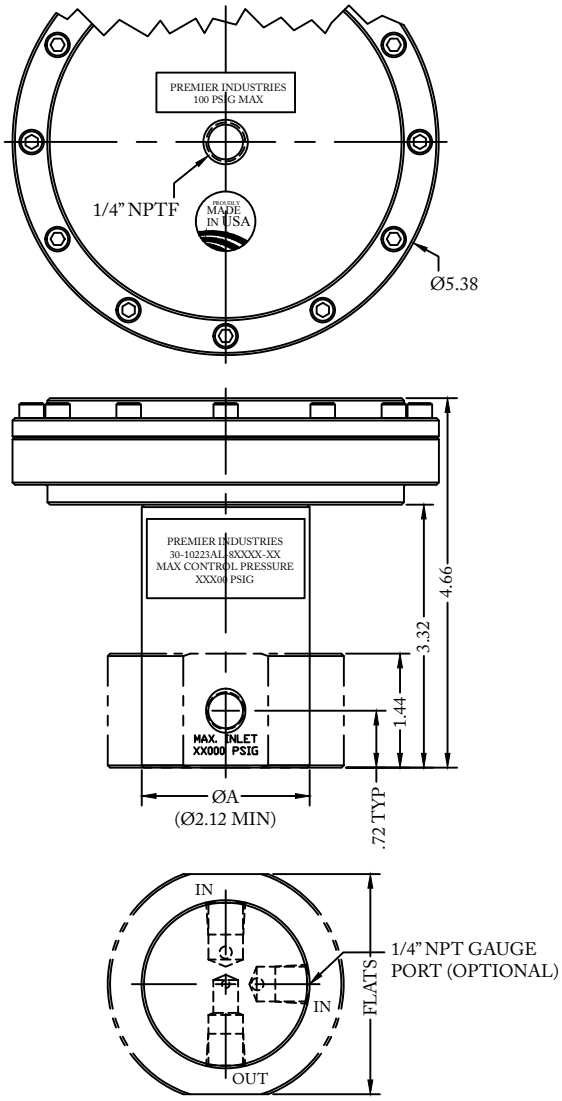

BODY DIMENSIONS		
PORT TYPE	ØA	FLATS
1/4 & 3/8 NPT	Ø2.12	——
1/4" M.P.	Ø2.12	1.98
1/4" H.P.	Ø2.12	1.98
3/8" M.P.	Ø2.48	2.36
3/8" H.P.	Ø2.98	2.78
9/16" M.P.	Ø2.98	2.78

(P/N: 30-10223AL shown above)

Kalrez® & Viton® are registered trademarks of E.I.duPont de Nemours and Company
AFLAS® is a registered trademark of the Asahi Glass Co., Ltd
PEEK® is a registered trademark of Victrex PLC

HIGH PRESSURE AIR LOADED 15000 PSIG

Back Pressure Regulators

3123AL SERIES

SERIES	-	1	2	3	4	5	-	6 7	-	8
30-10223AL	-						-		-	

1	OUTLET PRESSURE
8	300-15000 PSIG *20.68-1034.21 Bar* *(stainless steel only)* ***Diameter:** 0.312"* ***Area:** 0.0765 in²* ***Ratio:** 164/1 **
	*** 4.0" diameter diaphragm* *Diaphragm area: 12.5664 in²*

2	PORTING CONFIGURATION
H	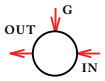
S	

3	PORT SIZE
4	1/4"
6	3/8"
9	9/16" *(Only available in medium pressure)*

4	PORT TYPE *(1/4" FNPT gauge port)*
1	FNPT
4	Medium Pressure
5	High Pressure

5	VALVE SEAT
0	Vespel®
1	17-4 H900 Stainless Steel
2	316 Stainless Steel
3	PEEK®

6 7	O-RINGS
00	BUNA-N
01	AFLAS®
02	VITON®
05	EPDM
11	KALREZ® *(Contact factory for pricing)*
12	Nitrile, Low-temp

8	Cv (FLOW)
0	0.06
1	0.14
2	0.20

15000 PSIG MAX INLET

The end user is responsible to ensure adequate fittings are used to connect regulator to plumbing.

Kalrez® Vespel® & Viton® are registered trademarks of E.I.duPont de Nemours and Company
AFLAS® is a registered trademark of the Asahi Glass Co., Ltd. PEEK® is a registered trademark of Victrex PLC

Contact factory for material certifications. Fees may apply.

HIGH FLOW PISTON SENSED
Back Pressure Regulators

5150 SERIES

PREMIER INDUSTRIES

1590 99th Ln NE,
Minneapolis, MN 55449
763-786-4020

MADE IN THE USA
Minneapolis, MN

DESCRIPTION

Premier 5150 low pressure, high flow, back pressure regulators rated for control pressures up to 200 PSIG *(13.79 bar)* and Cv 5.0 max.

FEATURES

- Cv: 5.0 max
- 200 PSIG *(68.95 bar)* max control pressure
- Economical pricing
- Compact, non-rising stem
- Machined bar stock body eliminates porosity found in castings

The Premier 5150 Series pressure reducing regulator's design is remarkably flexible.
Contact Premier Industries for a custom 5150 Series regulator to meet your exact needs.

5150 SERIES

HIGH FLOW PISTON SENSED
Back Pressure Regulators

SPECIFICATIONS

- **CONTROL PRESSURE RANGES:**
  - 0-25 PSIG *(0-1.72 bar)*
  - 0-50 PSIG *(0-3.45 bar)*
  - 0-125 PSIG *(0-8.62 bar)*
  - 0-200 PSIG *(0-13.79 bar)*
- **FLOW COEFFICIENT (Cv):** 5.0 max

MATERIALS OF CONSTRUCTION

- **BODY OPTIONS:**
  - 316 Stainless Steel
  - 303 Stainless Steel
  - 6061-T6 Aluminum, clear anodized
- **SEALS & SEAT MATERIAL OPTIONS:**
  - Buna-n
  - Viton®
  - EPDM
- **MAIN VALVE STEM:**
  - 17-4 Stainless Steel

PORTING

- **STANDARD INLET:**
  - 3/4" FNPT
- **STANDARD OUTLET:**
  - 3/4" FNPT

OPTIONS

- Private labeling

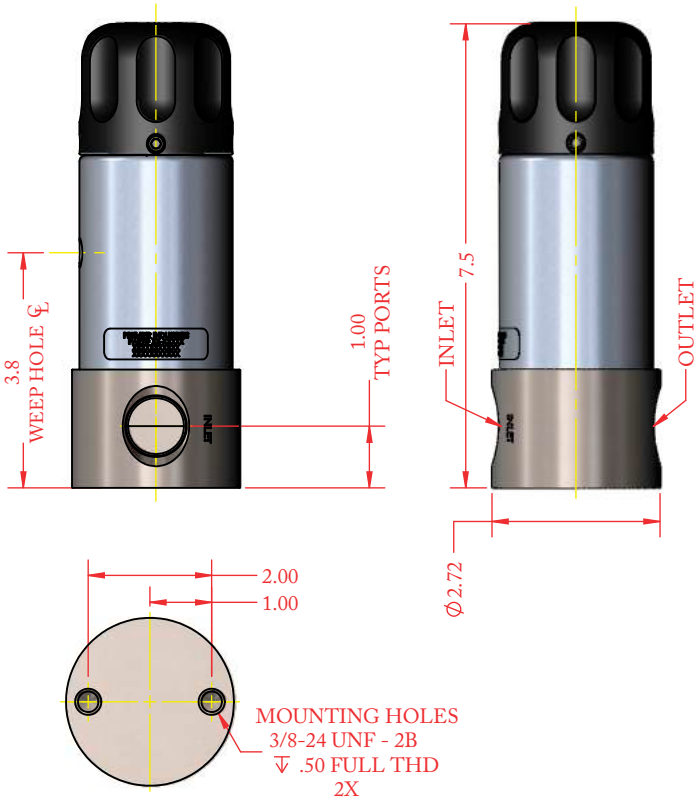

(Part number: 50-12800 shown above)

HIGH FLOW PISTON SENSED
Back Pressure Regulators

5150 SERIES

PART NUMBER	-	1	2	3	4	5
50-12800	-					

1	BODY & SENSOR ASSEMBLY
1	6061-T6 Aluminum, Clear Anodize
2	303 Stainless Steel
3	316 Stainless Steel
2	**SEAL MATERIAL**
1	Buna-n
2	Viton®
3	EPDM
3	**PORTING**
1	3/4" FNPT

4	CONTROL PRESSURE
1	0-25 PSIG *(0-1.72 bar)*
2	0-50 PSIG *(0-3.45 bar)*
3	0-125 PSIG *(0-8.62 bar)*
4	0-200 PSIG *(0-13.79 bar)*
5	**GAUGES**
0	None

Viton® is a registered trademark of E.I.duPont de Nemours and Company

HIGH FLOW, Cv 5.0 LOW PRESSURE AIR LOADED

Back Pressure Regulators

5150AL SERIES

PREMIER INDUSTRIES

1590 99th Ln NE,
Minneapolis, MN 55449
763-786-4020

MADE IN THE USA

Minneapolis, MN

DESCRIPTION

Premier 5150AL Series air loaded, single stage, high flow, low pressure, piston sensed, back pressure regulators, designed for control pressures up to 600 PSIG *(41.37 bar)*, and Cv 5.0. The 5150AL features an air loader with a max load pressure of 100 PSIG *(6.89 bar)*.

FEATURES

- Flow capacity (Cv): 5.0
- Compatible with electro pneumatic controllers
- Economical pricing
- Machined bar stock body eliminates porosity found in castings

The Premier 5150AL Series pressure reducing regulator's design is remarkably flexible.
Contact Premier Industries for a custom 5150AL Series regulator to meet your exact needs.

5150AL SERIES

HIGH FLOW, Cv 5.0 LOW PRESSURE AIR LOADED

Back Pressure Regulators

SPECIFICATIONS

- **CONTROL PRESSURE:** 600 PSIG *(41.37 bar)*
- **MAX AIR LOAD:** 100 PSIG *(6.89 bar)*
- **FLOW (Cv):** 5.0

MATERIALS OF CONSTRUCTION

- **BODY OPTIONS:**
  - 316 Stainless Steel
  - 303 Stainless Steel
  - 6061-T6 Aluminum, Clear Anodize
- **AIR LOADER HOUSING:** 6061-T6 Aluminum
- **PISTON:** 316 Stainless Steel
- **MAIN VALVE SEAT:** Teflon®
- **O-RINGS:** Buna-n
- **OTHER WETTED COMPONENTS:**
  - 316 Stainless Steel
  - 17-4 Stainless Steel

PORTING

- **STANDARD INLET:**
  - 1" NPT
- **STANDARD OUTLET:**
  - 1" NPT
- **AIR ACTUATOR:**
  - 1/4" FNPT

OPTIONS

- Private labeling

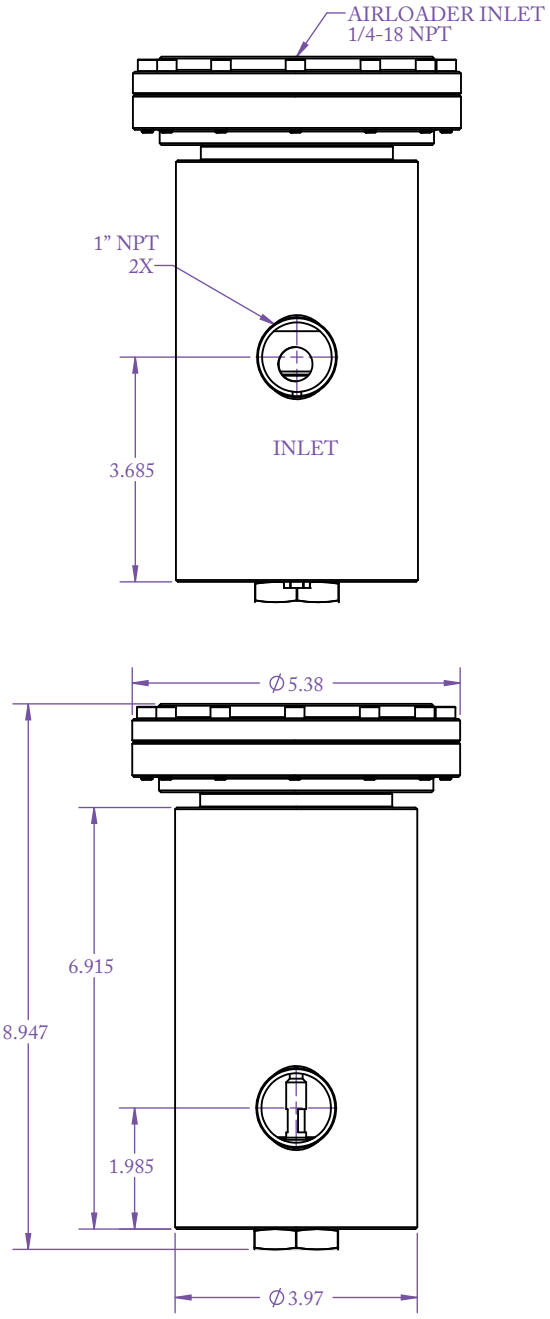

(Part number: 30-10230 shown above)

Teflon® is a registered trademark of E.I.duPont de Nemours and Company

HIGH FLOW, Cv 5.0 LOW PRESSURE AIR LOADED

Back Pressure Regulators

5150AL SERIES

PART #	-	1
30-10230	-	

1	BODY MATERIAL OPTIONS
1	303 Stainless Steel
2	316 Stainless Steel
3	6061-T6 Aluminum
Contact facility for other material options.	

HYDRAULIC HIGH PRESSURE

Back Pressure Regulators

6100 SERIES

PREMIER INDUSTRIES

1590 99th Ln NE,
Minneapolis, MN 55449
763-786-4020

MADE IN THE USA

Minneapolis, MN

DESCRIPTION

The high pressure, hydraulic, Premier 6100 Series are single stage, piston sensed, variable control pressure regulators, rated for inlet and outlet pressures up to 10000 PSIG *(689.48 bar)* and Cv 0.03, 0.06, 0.14, or 0.20.

They are used to regulate to a broad range of non-corrosive and corrosive media (based on materials of construction) Premier 6100 Series regulators can be supplied with a wide range of inlet and outlet configurations.

FEATURES

- Inlet/outlet pressures up to 10000 PSIG *(689.48 bar)* max
- Cv: 0.03, 0.06, 0.14, or 0.20
- Economical pricing
- Multiple mounting options *(bracket / panel nuts)*
- Machined bar stock body, bonnet and piston eliminates porosity found in castings
- Numerous materials & optional features available.

The Premier 6100 Series pressure reducing regulator's design is remarkably flexible. Contact Premier Industries for a custom 6100 Series regulator to meet your exact needs.

6100 SERIES

HYDRAULIC HIGH PRESSURE
Back Pressure Regulators

SPECIFICATIONS

- **MAXIMUM INLET PRESSURE:** 10000 PSIG *(689.48 bar)*
- **CONTROL PRESSURE RANGES:**
  - 5-500 PSIG *(0.34 - 34.5 bar)*
  - 5-800 PSIG *(0.34 - 55.16 bar)*
  - 10-1500 PSIG *(0.69 - 103.42 bar)*
  - 15-2500 PSIG *(1.03 - 172.37 bar)*
  - 25-4000 PSIG *(1.72- 275.79 bar)*
  - 50-6000 PSIG *(3.45 - 413.69 bar)*
  - 100-10000 PSIG*(6.89- 689.48 bar)* ***(stainless steel only)***
- **FLOW (Cv):** 0.03, 0.06, 0.14, 0.20
- **AMBIENT OPERATING TEMP:****
  - -15°F/-26°C to 165°F/74°C (BUNA-N)
  - -4°F/-20°C to 165°F/74°C (Viton®)
  - -65°F/-54°C to 165°F/74°C (EPDM)

***Lower temperature compounds are available, Above temperature ranges will apply to the majority of media for which the material is recommended. Temperature ranges can vary with some media, ALWAYS TEST UNDER SERVICE CONDITIONS.*

MATERIALS OF CONSTRUCTION

- **BODY & BONNET:**
  - 316 Stainless Steel & 17-4 Stainless Steel
- **WETTED, OTHER:**
  - 316 Stainless Steel
  - 17-4 Stainless Steel
- **SEALS:**
  - Viton-A®
  - BUNA-N
  - EPDM
  - KALREZ® *(Contact factory for pricing)*
  - AFLAS
  - Nitrile, low temperature
- **VALVE SEAT:**
  - Vespel®
  - PEEK®
  - 316 Stainless Steel (NACE)
  - 17-4 Stainless Steel

PORTING

- **INLET/OUTLET OPTIONS:**
  - 1/4 FNPT, SAE J1926, SAE AS5202**, NPTF, medium pressure
  - 3/8 FNPT, SAE J1926, SAE AS5202**, NPTF, medium pressure
  - 1/2 FNPT, SAE J1926, SAE AS5202**, NPTF
  - 9/16 medium pressure
  - 3/4 FNPT SAE J1926, SAE AS5202**, NPTF, medium pressure

*(SAE AS5202 supersedes MS33649**)*

OPTIONS

- Gauges
- Private label
- Panel mounting bracket: *P/N: 30-10059 (Ø2.15 panel hole)*
- Panel mounting nuts: *P/N: 30-10189 (Ø2.28 panel hole)*
- Surface mounting holes

PANEL NUT STYLE

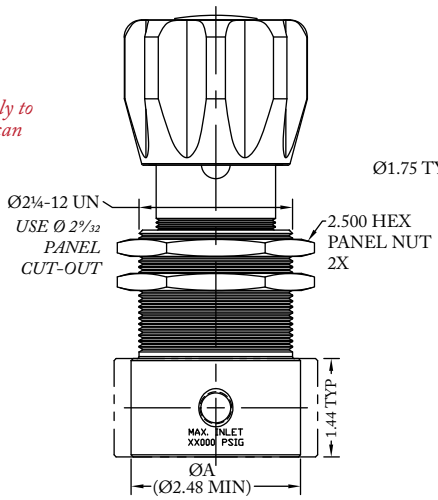

PANEL MOUNTING BRACKET STYLE

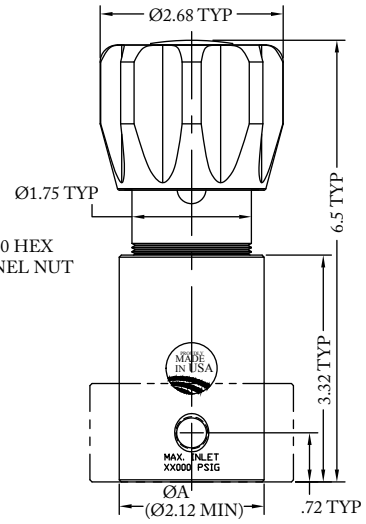

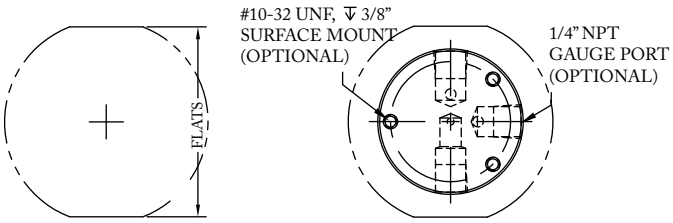

(Part number: 30-10066 shown above)

PANEL NUT BODY		
PORT TYPE	ØA	FLATS
NPT, NPTF	Ø2.48	——
1/4" OTHER	Ø2.48	2.36
3/8" M.P.	Ø2.48	2.36
3/8" SAE	Ø2.73	2.58
1/2" SAE	Ø2.98	2.81
9/16" M.P.	Ø2.98	2.81

MOUNTING BRACKET BODY		
PORT TYPE	ØA	FLATS
1/4 & 3/8 NPT,NPTF	Ø2.12	——
1/4" M.P.	Ø2.12	1.98
1/2" NPT, NPTF	Ø2.48	——
1/4" SAE	Ø2.48	2.36
3/8" M.P.	Ø2.48	2.36
3/8" SAE	Ø2.73	2.58
1/2" SAE	Ø2.98	2.81
9/16" M.P.	Ø2.98	2.81
3/4" NPT, NPTF	Ø2.98	——

Vespel® KALREZ® & Viton-A® are registered trademarks of E.I.duPont de Nemours and Company
AFLAS® is a registered trademark of Asahi Glass Co., Ltd.

HYDRAULIC HIGH PRESSURE
Back Pressure Regulators

6100 SERIES

SERIES	1 2	-	3	4	5	6	7	-	8	9 10	MODS
30-10066		-						-			

316 Stainless Steel body & 17-4 Stainless Steel bonnet standard

1 2	MOUNTING STYLE
MB	Mounting Bracket Style Body
PN	Panel Nut Style Body *(Panel Nuts Included)*

3	CONTROL PRESSURE
1	5-500 PSIG *(0.34-34.5 Bar)*
2	5-800 PSIG *(0.34-55.2 Bar)*
3	10-1500 PSIG *(0.69-103.4 Bar)*
4	15-2500 PSIG *(1.0-172.4 Bar)*
5	25-4000 PSIG *(1.7-275.8 Bar)*
6	50-6000 PSIG *(3.4-413.7 Bar)*
7	100-10000 PSIG *(6.9-689.5 Bar) (stainless steel only)*

4	FLOW (Cv)
A	Cv 0.03
0	Cv 0.06
1	Cv 0.14
2	Cv 0.2

5	PORTING CONFIG.
H	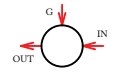
S	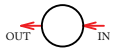 *(standard)*

6	PORT SIZE
4	1/4”
6	3/8”
8	1/2”*
9	9/16”**
T	3/4”

**1/2” ports not available in medium pressure*
***9/16” ports only available in medium pressure*

Gauge ports: 1/4” FNPT

7	PORT TYPE *IN/OUT*
1	NPT
2	SAE J1926
3	SAE AS5202**
4	Medium Pressure
6	NPTF

***SAE AS5202 supersedes MS33649*

8	VALVE SEAT
0	VESPEL® *(6000+ psig inlet)*
1	17-4 H900 Stainless Steel
2	316 Stainless Steel *(NACE)*
3	PEEK®

9 10	O-RING MATERIAL
00	BUNA-N
01	AFLAS®
02	VITON®
05	EPDM
11	KALREZ® *(Contact factory for pricing)*
12	NITRILE, LO-TEMP

MODIFICATIONS *Separate multiple mods with a dash*	
N	NACE MR0175 option
SM	Surface mount *Surface mounting holes: pattern dependant on port type & configuration*

10000 PSIG MAX INLET (Stainless Steel)
6000 PSIG MAX INLET (SAE 360 Brass)
The end user is responsible to ensure adequate fittings are used to connect regulator to plumbing.

Vespel® Kalrez® & Viton® are registered trademarks of E.I.duPont de Nemours and Company
Kel-F® is a registered trademark of 3M Company. AFLAS® is a registered trademark of Asahi Glass Co., Ltd.
PEEK is a registered trademark of Victrex PLC
Contact factory for material certifications. Fees may apply.

AIR LOADED HYDRAULIC HIGH PRESSURE

Back Pressure Regulators

6100AL SERIES

PREMIER INDUSTRIES

1590 99th Ln NE,
Minneapolis, MN 55449
763-786-4020

MADE IN THE USA

Minneapolis, MN

DESCRIPTION

The Premier 6100AL Series air loaded, hydraulic, piston sensed, single stage, high pressure, back pressure regulators feature control pressures up to 10000 PSIG *(689.48 bar)*, and Cv 0.03, 0.06, 0.14, or 0.2. Premier 6100AL Series regulators are used to regulate to a broad range of non-corrosive and corrosive media *(based on materials of construction)*.

FEATURES

- Compatible with electro pneumatic controllers
- Cv 0.03, 0.06, 0.14, or 0.2
- Control pressures up to 10000 PSIG *(689.48 bar)*
- Machined bar stock body, bonnet and piston eliminates porosity found in castings
- Numerous optional features are available

The Premier 6100AL Series back pressure regulator's design is remarkably flexible.
Contact Premier Industries for a custom Premier 6100AL Series regulator to meet your exact needs.

6100AL SERIES

AIR LOADED HYDRAULIC HIGH PRESSURE
Back Pressure Regulators

SPECIFICATIONS

- **MAXIMUM INLET PRESSURE:**
  - REGULATOR: 10000 PSIG / 689.5 bar *(316 Stainless Steel)*
    6000 PSIG / 689.5 bar *(SAE 360 Brass)*
  - AIR ACTUATOR: 100 PSIG *(6.89 bar)*
- **CONTROL PRESSURE RANGES:**
  - 10-1500 PSIG *(0.69 - 103.42 bar)*
    Diameter: 1.000"
    Area: 0.7854 in²
    *Ratio: 16/1 ***
  - 15-2500 PSIG *(1.03 - 172.37 bar)*
    Diameter: 0.750"
    Area: 0.4418 in²
    *Ratio: 28/1 ***
  - 50-6000 PSIG *(3.45 - 413.69 bar)*
    Diameter: 0.500"
    Area: 0.1964 in²
    *Ratio: 64/1 ***
  - 100-10000 PSIG *(6.89 - 689.5 bar)*
    Diameter: 0.375"
    Area: 0.1104 in²
    *Ratio: 114/1 ***

  *** 4.0" diameter diaphragm*
  Diaphragm area: 12.5664 in²
- **FLOW (Cv):** 0.03, 0.06, 0.14, or 0.20

MATERIALS OF CONSTRUCTION

- **BODY OPTIONS**:
  - SAE 360 brass
  - 316 Stainless Steel
- **HOUSING, AIR ACTUATOR :**
  - 6061-T6 Aluminum/clear anodized
- **DIAPHRAGM, AIR ACTUATOR :**
  - Neoprene, nylon fabric-reinforced
- **MAIN VALVE STEM:** 316 Stainless Steel
- **MAIN VALVE SEAT OPTIONS:**
  - Vespel®
  - 17-4 Stainless Steel
  - 316 Stainless Steel
  - PEEK®
- **ELASTOMER SEAL OPTIONS:**
  - BUNA-N
  - Viton-A®
  - EPDM
  - Kalrez® *(Contact factory for pricing)*
- **WETTED PARTS:**
  - 316 Stainless Steel
  - 17-4 Stainless Steel
- **BACK-UP RINGS:**
  - PTFE
  - PCTFE

PORTING

- **INLET/OUTLET**
  - 1/4", 3/8", 1/2" FNPT
  - 1/4", 3/8", 1/2" SAE J1926
  - 1/4", 3/8", 1/2" SAE AS5202 *(MS33649**)*
  - 1/4", 3/8", 9/16" MEDIUM PRESSURE
  - 1/4", 3/8", 1/2" NPTF
- **AIR ACTUATOR**:
  - 1/4-18" FNPT *(Standard)*
  - 1/4" SAE AS5202 *(mod)*
  - 1/4" SAE J1926 *(mod)*
  - 1/8" FNPT *(mod)*

OPTIONAL ITEMS

- Panel mounting bracket: *P/N: 30-10059 (Ø2.15 panel hole)*
- Surface mount
- Private label

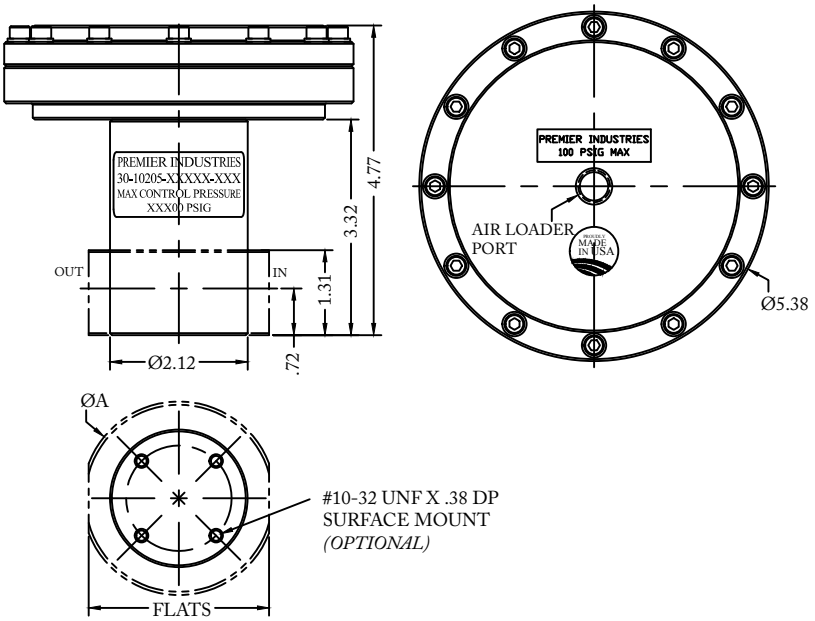

(Part number: 30-10205 shown above)

BODY DIMENSIONS		
PORT TYPE	ØA	FLATS
1/4 & 3/8 NPT	Ø2.12	——
1/4" M.P.	Ø2.12	1.98
1/2" NPT, NPTF	Ø2.48	——
1/4" SAE	Ø2.48	2.36
3/8" M.P.	Ø2.48	2.36
3/8" SAE	Ø2.73	2.58
1/2" SAE	Ø2.98	2.81
9/16" M.P.	Ø2.98	2.81

***SAE AS5202 supersedes MS33649*
Kalrez® Vespel® & Viton-A® are registered trademarks of E.I.duPont de Nemours and Company
PEEK® is a registered trademark of Victrex PLC

AIR LOADED HYDRAULIC HIGH PRESSURE
Back Pressure Regulators

6100AL SERIES

PART #	-	1	2	3	4	5	-	6	7 8	-	MODS
30-10205	-						-			-	

1	BODY MATERIALS *(MAX. INLET PRESSURE)*
1	SAE 360 Brass *(6000 psig / 413.7 bar)*
2	316 Stainless Steel *(10000 psig / 689.5 bar)*

2	CONTROL PRESSURE	
3	10-1500 psig *(0.69-103.4 bar)*	*Diameter: 1.000" Area: 0.7854 in² Ratio: 16/1 ***
4	15-2500 psig *(1.0-172.4 bar)*	*Diameter: 0.750" Area: 0.4418 in² Ratio: 28/1 ***
6	50-6000 psig *(3.4-413.7 bar)*	*Diameter: 0.500" Area: 0.1964 in² Ratio: 64/1 ***
7	100-10000 psig *(6.9-689.5 bar) (stainless steel only)*	*Diameter: 0.375" Area: 0.1104 in² Ratio: 114/1 ***

*** 4.0" diameter diaphragm*
Diaphragm area: 12.5664 in²

3	FLOW (Cv)
A	Cv 0.03
0	Cv 0.06
1	Cv 0.14
2	Cv 0.2

4	PORT SIZE
4	1/4"
6	3/8"
8	1/2"*
9	9/16"**

**1/2" not available in medium pressure*
***9/16" only available in medium pressure*

5	PORT TYPE
1	FNPT
2	SAE J1926
3	SAE AS5202 *(MS33649**)*
4	MEDIUM PRESSURE
6	NPTF

***SAE AS5202 supersedes MS33649*

6	VALVE SEAT
0	Vespel®
1	17-4 H900 Stainless Steel
2	316 Stainless Steel
3	PEEK®

7 8	O-RING MATERIAL
00	BUNA-N
02	VITON®
05	EPDM
11	KALREZ® *(Contact factory for pricing)*

MODIFICATIONS *Separate multiple mods with a dash*	
BLANK	none
AS	1/4" SAE AS5202 LOADER PORT
E	1/8" NPT AIR LOADER PORT
J	1/4" SAE J1926 LOADER PORT
SM	SURFACE MOUNT

10000 PSIG MAX INLET (Stainless Steel) 6000 PSIG MAX INLET (Brass)
The end user is responsible to ensure adequate fittings are used to connect regulator to plumbing.

Kalrez® & Viton® are registered trademarks of E.I.duPont de Nemours and Company
PEEK® is a registered trademark of Victrex PLC

Contact factory for material certifications. Fees may apply.

DOME LOADED HYDRAULIC HIGH PRESSURE

Back Pressure Regulators

6100DL SERIES

PREMIER INDUSTRIES

1590 99th Ln NE,
Minneapolis, MN 55449
763-786-4020

MADE IN THE USA

Minneapolis, MN

DESCRIPTION

The Premier 6100DL Series dome loaded, hydraulic, piston sensed, high pressure, back pressure regulators feature control pressures up to 6000 PSIG *(413.69 bar)*, and Cv 0.06, 0.14, or 0.2. Premier 6100DL Series regulators are used to regulate to a broad range of non-corrosive and corrosive media *(based on materials of construction)*.

FEATURES

- Compatible with electro pneumatic controllers
- 1:1 dome load
- Cv 0.06, 0.14, 0.2 *(Cv 0.4 model available upon request)*
- Control pressures up to 6000 PSIG *(413.69 bar)*
- Very competitive pricing
- Machined bar stock body, bonnet and piston eliminates porosity found in castings
- Gas versions available
- Designs available with bias spring

The Premier 3100DL Series back pressure regulator's design is remarkably flexible.
Contact Premier Industries for a custom Premier 3100DL Series regulator to meet your exact needs.

6100DL SERIES

DOME LOADED HYDRAULIC HIGH PRESSURE

Back Pressure Regulators

SPECIFICATIONS

- **MAXIMUM INLET PRESSURE:**
  - REGULATOR: 6000 PSIG (*413.69 bar*)
  - DOME LOAD: 6000 PSIG (*413.69 bar*)
- **MAXIMUM CONTROL PRESSURE:**
  - 6000 PSIG (*413.69 bar*)
- **FLOW (Cv):** 0.06, 0.14, or 0.20

(See P/N 30-10221F for Cv 0.4)

MATERIALS OF CONSTRUCTION

- **BODY OPTIONS**:
  - SAE 360 Brass
  - 316 Stainless Steel
- **BONNET OPTIONS**:
  - SAE 360 Brass
  - 303 Stainless Steel
- **MAIN VALVE SEAT OPTIONS:**
  - Vespel®
  - 17-4 Stainless Steel
- **ELASTOMER SEAL OPTIONS:**
  - BUNA-N
  - Viton®
  - EPDM
  - Kalrez® *(Contact factory for pricing)*
- **WETTED PARTS:**
  - 300 Series Stainless Steel
  - 17-4 Stainless Steel

PORTING

- **INLET/OUTLET OPTIONS**
  - 1/4", 3/8" FNPT
  - 1/4", 3/8" SAE J1926
  - 1/4", 3/8" SAE AS5202 *(MS33649**)*
- **LOAD PORT**: 1/8" FNPT

OPTIONAL ITEMS

- Private label
- Load port orientation
- Bias spring *(P/N: 30-10211)*
- Cv 0.4 model *(P/N: 30-10211F)*

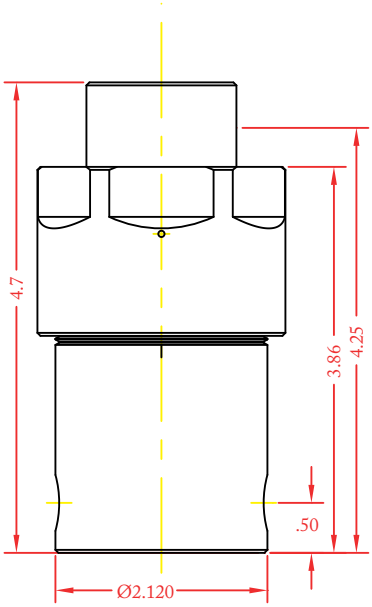

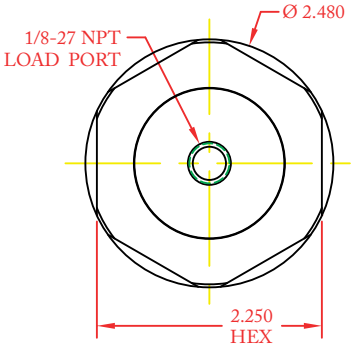

(Part number: 30-10211D shown above)

***SAE AS5202 supersedes MS33649*

Kalrez® Vespel® & Viton® are registered trademarks of E.I.duPont de Nemours and Company

DOME LOADED HYDRAULIC HIGH PRESSURE

Back Pressure Regulators

6100DL SERIES

SERIES	-	1	2	3	4	-	5 6	-	7
30-10211D	-					-		-	

1	BODY MATERIALS
1	SAE 360 Brass Body & Bonnet
2	316 Stainless Steel Body, 303 Stainless steel Bonnet

2	FLOW (Cv)
0	Cv 0.06
1	Cv 0.14
2	Cv 0.2

3	PORT SIZE
4	1/4”
6	3/8”

DOME PORT: 1/8-27 FNPT

4	PORT TYPE
1	FNPT
2	SAE J1926
3	SAE AS5202 *(MS33649**)*

***SAE AS5202 supersedes MS33649*

5 6	O-RING MATERIAL
00	BUNA-N
02	VITON®
05	EPDM
11	KALREZ® *(Contact factory for pricing)*

7	VALVE SEAT
0	Vespel®
1	17-4 Stainless Steel

6000 PSIG MAX INLET

The end user is responsible to ensure adequate fittings are used to connect regulator to plumbing.

Kalrez® Vespel® & Viton® are registered trademarks of E.I.duPont de Nemours and Company

Contact factory for material certifications. Fees may apply.

HIGH PRESSURE HYDRAULIC 15000 PSIG

Back Pressure Regulators

6123 SERIES

PREMIER INDUSTRIES

1590 99th Ln NE,
Minneapolis, MN 55449
763-786-4020

MADE IN THE USA

Minneapolis, MN

DESCRIPTION

High pressure, hydraulic, Premier 6123 Series back pressure regulators are single stage, piston sensed, variable control pressure regulators, rated for inlet pressures up to 15000 PSIG *(1034.21 bar)* with a control pressure range of 300-15000 PSIG *(20.68 - 1034.21 bar)*. For optimum compatibility with your desired application, we offer a choice of four seat materials: hardened 17-4 stainless steel, Vespel®, 316 stainless steel and PEEK®.

Premier 6123 Series regulators are used to regulate a broad range of non-corrosive and corrosive media (based on materials of construction) and can be used for both hydraulic and gas applications.

FEATURES

- Rated for pressures up to 15000 PSIG *(1034.21 bar)*
- Flow capacity (Cv): 0.06 0.14, or 0.20
- Low torque ball bearing hand knob
- Durable hardened stainless steel seat option
- Very competitive pricing
- Machined bar stock body, bonnet and piston eliminates porosity found in castings
- Numerous optional features are available.

The Premier 6123 Series pressure reducing regulator's design is remarkably flexible. Contact Premier Industries for a custom 6123 Series regulator to meet your exact needs.

6123 SERIES

HIGH PRESSURE HYDRAULIC 15000 PSIG

Back Pressure Regulators

SPECIFICATIONS

- **MAXIMUM INLET PRESSURE:** 15000 PSIG *(1034.21 bar)*
- **CONTROL PRESSURE RANGE:**
  - 300-15000 PSIG *(20.68 - 1034.21 bar)*
- **FLOW (Cv):** 0.06, 0.14, or 0.20
- **OPERATING TEMPERATURE:**
  - -15°F/-26°C to 165°F/74°C (BUNA-N)
  - -4°F/-20°C to 165°F/74°C (VITON-A®)
  - -65°F/-54°C to 165°F/74°C (EPDM)
  - 15°F/-9°C to 165°F/74°C (AFLAS)
  - -65°F/-54°C to 165°F/74°C (NITRILE)

MATERIALS OF CONSTRUCTION

- **BODY** :
  - 316 Stainless Steel,
- **BONNET**:
  - 17-4 Stainless Steel
- **WETTED PARTS, OTHER**:
  - 316 Stainless Steel
  - 17-4 Stainless Steel
  - PH15-7Mo Stainless Steel
- **O-RINGS:**
  - BUNA-N
  - AFLAS®
  - Viton-A®
  - EPDM
  - KALREZ® *(Contact factory for pricing)*
  - Nitrile, Lo-temp
- **BACK-UP RINGS**: PTFE or PCTFE
- **VALVE SEAT**:
  - Vespel®
  - PEEK®
  - 17-4 Stainless Steel, Hardened
  - 316 Stainless Steel

PORTING

- **INLET/OUTLET PORTING OPTIONS**:
  - 1/4", 3/8" FNPT
  - 1/4", 3/8", 9/16" Medium pressure
  - 1/4", 3/8" High pressure

OPTIONAL ITEMS

- Inlet gauge
- Private label
- Panel mounting bracket: *P/N: 30-10059 (Ø2.15 panel hole)*

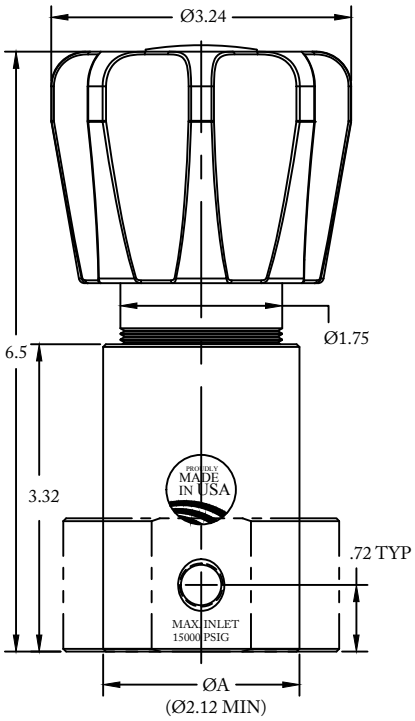

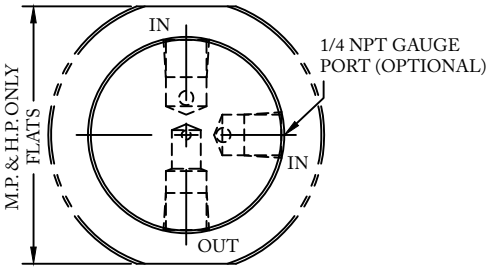

Part number shown above: 30-10223

BODY DIMENSIONS		
PORT TYPE	ØA	FLATS
1/4 & 3/8 NPT	Ø2.12	——
1/4" M.P. & H.P	Ø2.12	1.98
3/8" M.P.	Ø2.48	2.36
3/8" H.P.	Ø2.98	2.78
9/16" M.P.	Ø2.98	2.78

Vespel® Kalrez® & Viton® are registered trademarks of E.I.duPont de Nemours and Company
AFLAS® is a regestered trademark of the Asahi Glass Co., Ltd.
PEEK® is a registered trademark of Victrex PLC

HIGH PRESSURE HYDRAULIC 15000 PSIG

Back Pressure Regulators

6123 SERIES

SERIES	-	1	2	3	4	5	-	6 7	-	8
30-10223	-						-		-	

1	OUTLET PRESSURE
8	300-15000 PSIG *20.68-1034.21 Bar*
2	**PORTING CONFIGURATION**
H	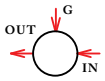
S	
3	**PORT SIZE**
4	1/4”
6	3/8”
9	9/16” *(Only available in medium pressure)*

4	PORT TYPE *(1/4” FNPT gauge port)*
1	FNPT
4	Medium Pressure
5	High Pressure
5	**VALVE SEAT**
0	Vespel®
1	17-4 H900 Stainless Steel
2	316 Stainless Steel
3	PEEK®

6 7	O-RINGS
00	BUNA-N
01	AFLAS®
02	VITON®
05	EPDM
11	KALREZ® *(Contact factory for pricing)*
12	Nitrile, Low-temp
8	**Cv (FLOW)**
0	0.06
1	0.14
2	0.20

15000 PSIG MAX INLET

The end user is responsible to ensure adequate fittings are used to connect regulator to plumbing.

Kalrez® Vespel® & Viton® are registered trademarks of E.I.duPont de Nemours and Company
AFLAS® is a registered trademark of the Asahi Glass Co., Ltd. PEEK® is a registered trademark of Victrex PLC

Contact factory for material certifications. Fees may apply.

HYDRAULIC HIGH PRESSURE 20000 PSIG

Back Pressure Regulators

6125 SERIES

PREMIER INDUSTRIES

1590 99th Ln NE,
Minneapolis, MN 55449
763-786-4020

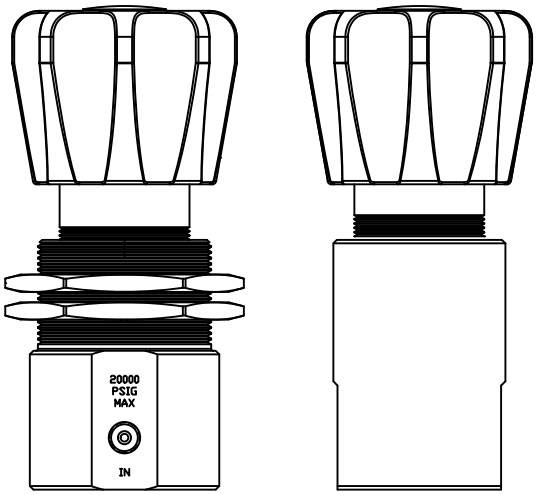

MADE IN THE USA

Minneapolis, MN

DESCRIPTION

High pressure, hydraulic Premier 6125 Series back pressure regulators are single stage, piston sensed regulators rated for inlet and outlet pressures up to 20000 PSIG *(1378.95 bar)*, and Cv 0.03, 0.06, 0.14, or 0.20.

FEATURES

- Rated for pressures up to 20000 PSIG *(1378.95 bar)*
- Flow capacity (Cv): 0.03, 0.06, 0.14, or 0.20
- Fluted knob with ball-bearing loader
- Machined bar stock body, bonnet and piston eliminates porosity found in castings

The Premier 6125 Series pressure reducing regulator's design is remarkably flexible. Contact Premier Industries for a custom 6125 Series regulator to meet your exact needs.

6125 SERIES

HYDRAULIC HIGH PRESSURE 20000 PSIG

Back Pressure Regulators

SPECIFICATIONS

- **MAX INLET PRESSURE:** 20000 PSIG *(1378.95 bar)*
- **CONTROL PRESSURE RANGE:**
  - 500-20000 PSIG *(34.47 - 1378.95 bar)*
- **FLOW (Cv):** 0.03, 0.06, 0.14, 0.20
- **OPERATING TEMPERATURE:**
  - -15°F/-26°C to 165°F/74°C (BUNA-N)
  - -4°F/-20°C to 165°F/74°C (VITON-A®)
  - -65°F/-54°C to 165°F/74°C (EPDM)

  ***lower temperature compounds available upon request*

MATERIALS OF CONSTRUCTION

- **BODY**:
  - 316 Stainless Steel,
- **BONNET**:
  - 17-4 Stainless Steel
- **WETTED PARTS, OTHER**:
  - 316 Stainless Steel
  - 17-4 Stainless Steel
- **O-RINGS:**
  - BUNA-N
  - Aflas®
  - Viton-A®
  - EPDM
  - KALREZ®
- **BACK-UP RINGS**: PCTFE & PEEK®
- **VALVE SEAT**:
  - 316 Stainless Steel

PORTING

- **INLET/OUTLET/VENT PORTING**:
  - 1/4" Medium pressure, High Pressure*
  - 3/8" Medium pressure, High Pressure
  - 9/16" Medium pressure, High Pressure

**Cv 0.20 not available with 1/4" high pressure ports*

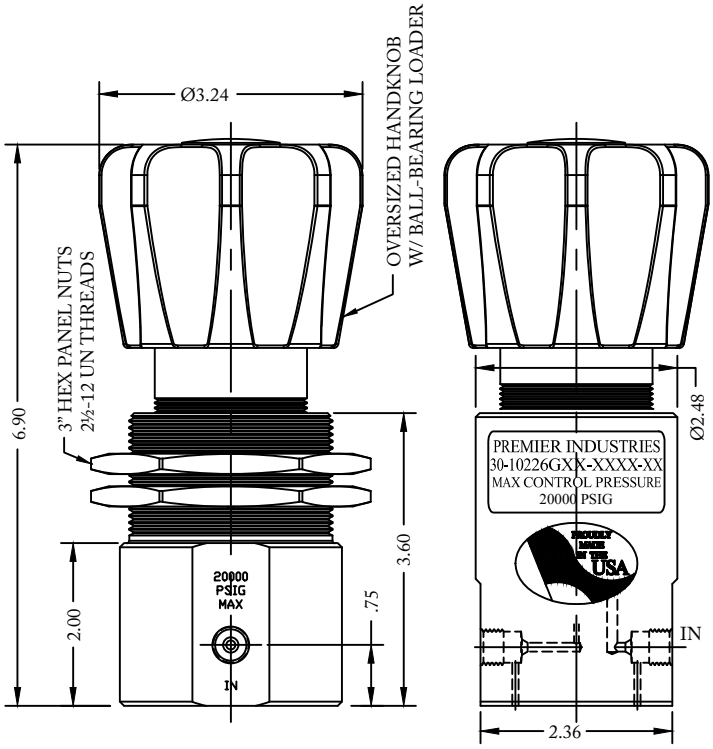

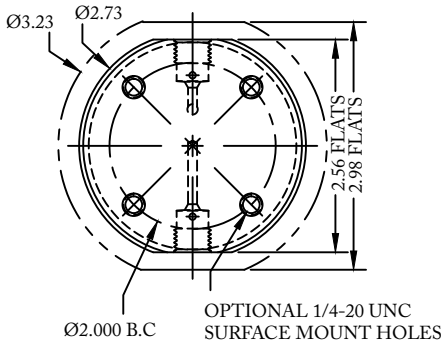

(Part number shown above: 30-10226)

OPTIONAL ITEMS

- Surface mount
- Panel mounting nuts (P/N: 30-10145-02)

PANEL NUT BODY		
PORT TYPE	BODY Ø	FLATS
1/4" M.P. & H.P.	Ø2.73	2.56
3/8" M.P. & H.P.	Ø2.73	2.56
9/16" M.P.	Ø3.23	2.98

MOUNTING BRACKET BODY		
PORT TYPE	BODY Ø	FLATS
1/4" M.P. & H.P.	Ø2.48	2.36
3/8" M.P. & H.P.	Ø2.48	2.36
9/16" M.P.	Ø3.23	2.98

Kalrez® Vespel® & Viton® are registered trademarks of E.I.duPont de Nemours and Company
AFLAS® is a registered trademark of the Asahi Glass Co., Ltd.
PEEK® is a registered trademark of Victrex PLC

HYDRAULIC HIGH PRESSURE 20000 PSIG

Back Pressure Regulators

6125 SERIES

PART #	1 2	-	3	4	5	6	-	7 8	-	MODS
30-10226		-					-		-	

1 2	BODY STYLE
MB	Mounting bracket style body
PN	Panel nut style body *(panel nuts included)*

3	FLOW (Cv)
A	Cv: 0.03
0	Cv: 0.06
1	Cv: 0.14
2	Cv: 0.20*

**0.20 Cv not available with 1/4" high pressure ports*

4	PORTING CONFIGURATION
S	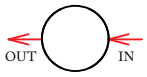

5	PORT SIZE
4	1/4"
6	3/8"
9	9/16"

6	PORT TYPE *(IN/OUT/VENT)*
4	Medium pressure
5	High pressure*

**0.20 Cv not available with 1/4" high pressure ports*

7 8	O-RING MATERIAL
00	BUNA-N
01	AFLAS®
02	VITON®
05	EPDM
11	KALREZ® *(Contact factory for pricing)*

MODIFICATIONS	
Blank	None
SM	Surface mount

20000 PSIG MAX INLET

The end user is responsible to ensure adequate fittings are used to connect regulator to plumbing.

Kalrez® & Viton® are registered trademarks of E.I.duPont de Nemours and Company
AFLAS® is a registered trademark of the Asahi Glass Co., Ltd.

Contact factory for material certifications. Fees may apply.

MITY MITE REPLACEMENT DOME LOADED

Back Pressure Regulators

P91W SERIES

PREMIER INDUSTRIES

1590 99th Ln NE,
Minneapolis, MN 55449
763-786-4020

MADE IN THE USA

Minneapolis, MN

DESCRIPTION

The dome loaded Premier P91W Series serves as a replacement for the Mity Mite 91W, and features a new and improved diaphragm seal. The P91W Series dome-loaded, back pressure regulator operates to maintain a constant upstream pressure by sensing the upstream pressure and limiting it through constant throttling. The dome must be charged (externally) from a gas pressure source; two NPT connections are available (1 for dome loading and the second for an optional gauge). The P91W Series features a control pressure range of 100-2000 PSIG (6.89 - 137.9 bar) / *100-3000 PSIG (6.89 - 206.84 bar) for stainless steel models*, Gylon® 3522 diaphragm, Cv: 0.38 or 0.17 and can be used to control both gases and liquids as compatible with the materials of construction.

FEATURES

- New and improved PTFE diaphragm seal
- External dome load
- Cv: 0.38 or 0.17
- Machined bar stock body, bonnet and piston eliminates porosity found in castings
- Optional precharge isolation valves available

The dome loaded Premier P91W Series back pressure regulator's design is remarkably flexible.
Contact Premier Industries for a custom dome loaded Premier P91W Series back pressure regulator to meet your exact needs.

P91W SERIES

MITY MITE REPLACEMENT DOME LOADED

Back Pressure Regulators

SPECIFICATIONS

- **CONTROL PRESSURE RANGE:**
  - 100-2000 PSIG / 6.89 - 137.9 bar *(aluminum body)*
  - 100-3000 PSIG / 6.89 - 206.8 bar *(stainless steel or hastelloy body options)*
- **FLOW (Cv):** 0.38 or 0.17
- **AMBIENT OPERATING TEMPERATURE RANGE:**
  - -65˚F/-54˚C to 200˚F/93˚C (PTFE)

MATERIALS OF CONSTRUCTION

- **BODY**:
  - 2024-T4 Aluminum
  - 316 Stainless Steel
  - Hastelloy
- **BONNET**: 2024-T4 Aluminum
- **DIAPHRAGM:** Gylon® 3522
- **O-RING, NON-WETTED:** Viton®

PORTING

- **INLET PORTING**:
  - 1/4" FNPT
- **OUTLET PORTING**:
  - 1/4" FNPT
- **EXTERNAL DOME LOADING/GAUGE CONNECTIONS:**
  - 1/4" FNPT and 1/8" FNPT (interchangeable)

OPTIONS

- Precharge isolation valves
- Gauges
- Private label

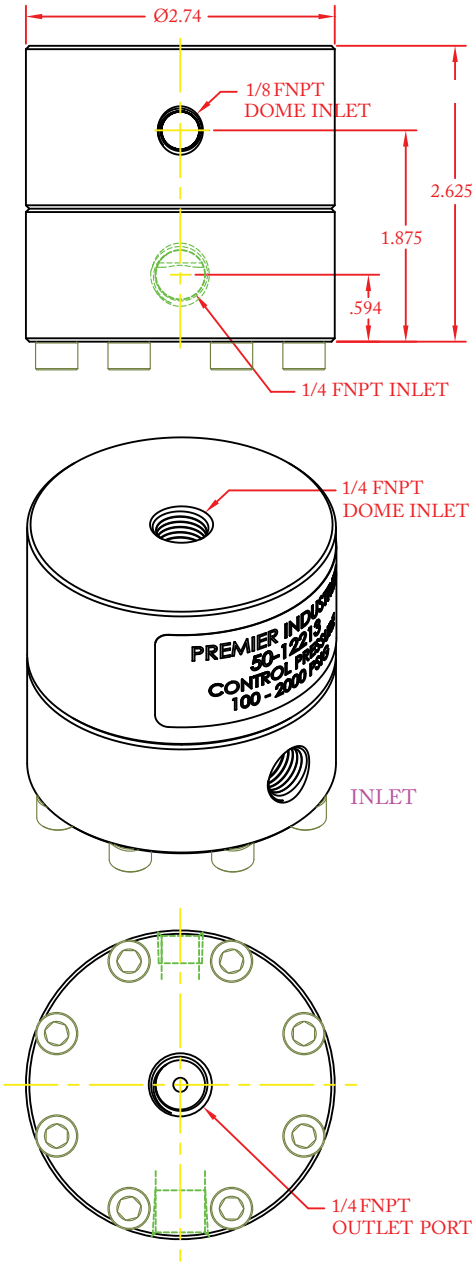

(Part number: 50-12253 shown above)

Viton® is a registered trademark of E.I.duPont de Nemours and Company
Gylon® is a registered trademark of Garlock, Inc.

MITY MITE REPLACEMENT DOME LOADED

Back Pressure Regulators

P91W SERIES

PART #	1	-	2
50-12253		-	

1	BODY MATERIAL *(MAX. INLET PRESSURE)*
Blank	2024-T4 Aluminum *(100-2000 psig / 6.89 - 137.9 bar)*
S	316 Stainless Steel *(100-3000 psig / 6.89-206.8 bar)*
H	Hastelloy *(100-3000 psig / 6.89-206.8 bar)*
2	**Cv RATING**
Blank	0.38
1	0.17

DEMAND FLOW REGULATORS

Premier demand flow regulators supply gas on the demand of a pump drawn instrument and automatically turn off. The new patented single stage design provides increased sensitivity and better performance at high pressures. With the flexibility of a wide range of inlet and outlet porting options, materials for construction, and a range of optional items, the Premier 4902 Series demand flow regulators are sure to integrate smoothly into your desired application.

DEMAND FLOW REGULATORS

4902 Series *Single Stage, Vaccum Actuated (Demand Flow) Pressure Reducing Regulators* **319**

4903 Series *Miniature, Single Stage, Vaccum Actuated (Demand Flow) Pressure Reducing Regulators* **321**

SINGLE STAGE VACUUM ACTUATED

Demand Flow Regulators

4902 SERIES

PREMIER INDUSTRIES

1590 99th Ln NE,
Minneapolis, MN 55449
763-786-4020

MADE IN THE USA

Minneapolis, MN

DESCRIPTION

Premier's patented, efficient, and easy to use 4902 Series demand flow regulators (also referred to as "sample regulators" and "vacuum actuated regulators") supply gas as demanded by an analyzer and automatically shut off. The highly sensitive, patented, single stage design allows for reduced testing time, permitting the flow of gas at less than one inch water column. Furthermore, the high flow capacity of the Premier 4902 Series demand flow regulator enables multiple analyzers to be tested on a single docking station.

Premier 4902 Series regulators offer great flexibility, available in 6061-T6 aluminum, nickel plated brass, and stainless steel, with a variety of: porting options, wetted materials, o-ring seals, elastomers, gauges, and other additional options.

Premier demand flow regulators make calibration quick and easy by eliminating the need for sample bags, flow meters, or special operator training; they also save on expensive calibration gases by only transferring as much gas as demanded by the instrument. Commonly used with: gas analyzers, portable gas detectors, calibration gases, instruments that use pump drawn calibration gases.

FEATURES

- Compact size (3" diameter x 2.0" high)
- The unique high flow capability of the Premier 4902 Series design allows multiple analyzers on a single docking station.
- Patented single stage design *(patent no.: 8,550,113 B1)*
- Reduced particle contamination with 40 Micron stainless steel inlet filter
- Integral Relief Valve
- Versions available with integral C10 connections
- Versions available with stainless steel bodies and wetted components.
- Very competitive pricing
- Models are available for both corrosive and non-corrosive service
- Machined bar stock bodies eliminate porosity found in castings

The Premier 4902 Series pressure reducing regulator's design is remarkably flexible.
Contact Premier Industries for a custom Premier 4902 Series regulator to meet your exact needs.

4902 SERIES

SINGLE STAGE VACUUM ACTUATED
Demand Flow Regulators

SPECIFICATIONS

- **Flow:** 3.0 LPM @ 3" H_2O,
  - up to 8LPM with increased vacuum
- **Maximum inlet pressure :** 3000 PSIG *(206.84 bar)*
  (with appropriate inlet connection)

MATERIALS OF CONSTRUCTION

- **BODY**:
  - 6061-T6 Aluminum, Clear Anodize *(Standard)*
  - 303 Stainless Steel
  - Brass, Nickel Plated
- **BONNET**: Aluminum, Clear Anodize
- **VALVE SEAT**: Viton® or EPDM and Teflon®
- **O-RING SEALS**:
  - Viton® *(Standard)*
  - EPDM
  - numerous other compounds available
- **DIAPHRAGM:**
  - Buna-N *(Standard)*
  - Viton®
- **INLET GAUGE:**
  - Brass Socket / Stainless Steel Case *(Standard)*
  - Stainless Steel Socket / Stainless Steel Case

PORTING

- **INTEGRATED INLET PORTING OPTIONS**:
  - C10 integrated 1/4 FNPT, *(Standard)*
  - 1/4 FNPT
  - 1/8 FNPT
- **OPTIONAL INLET ADAPTER CONNECTIONS**:
  - C-10 (5/8-18 UNF)
  - CGA 180
  - CGA 350
  - CGA 330/660
  - CGA 580/590
  - CGA 600
- **INTEGRATED OUTLET PORTING OPTIONS**:
  - 1/8" FNPT *(Standard)*
- **OPTIONAL OUTLET ADAPTER CONNECTIONS**:
  - 3/16" hose barb *(Standard)*
  - 1/8" hose barb
  - 1/4" hose barb

OPTIONS

- CGA Connections
- Optional hose barbs available in outlet
- Private Label

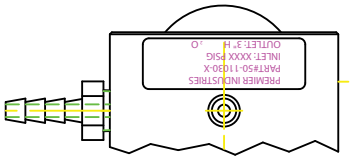

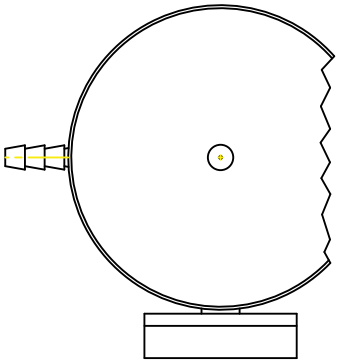

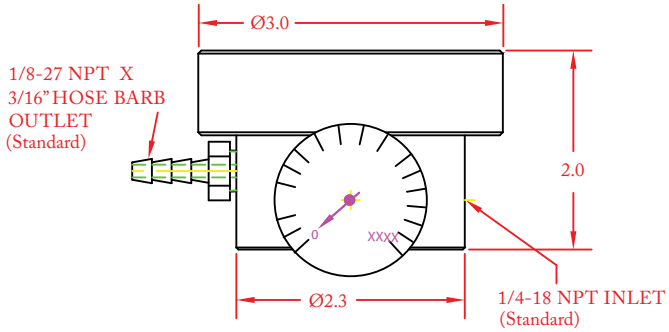

ORDERING

- **Standard:** part number: 50-11030
- **Non-standard:** part number assigned per requirements

Viton® and Teflon® are registered trademarks of E.I.duPont de Nemours and Company
Contact factory for material certifications. Fees may apply.

COMPACT SINGLE STAGE VACUUM ACTUATED

Demand Flow Regulators

4903 SERIES

PREMIER INDUSTRIES

1590 99th Ln NE,
Minneapolis, MN 55449
763-786-4020

MADE IN THE USA

Minneapolis, MN

DESCRIPTION

Patented Premier 4903 demand flow regulators save you time & money on calibrations by transferring the precise amount of gas required by a pump drawn instrument. As long as the pump is active, the regulator will remain "open" and gas will flow. When the pump stops, the regulator will turn off. The result? Less wasted gas, and lower calibration costs. These new vacuum actuated regulators are built with patented technology, eliminating the need for shut off valves, sample bags, or specially trained operators, making your calibrations quick & easy.

The compact and economical Premier 4903 regulator is available with a variety of body, diaphragm, and sealing materials to suit a variety of calibration gas requirements. Premier 4903 Series regulators permit reduced testing time, with their ability to begin flow of gas at <3" H20 vacuum.

Commonly used with: portable gas detectors, gas analyzers, calibration gases, and pump drawn instruments.

FEATURES

- Compact size (2" diameter x 1.7" high)
- Patented single stage design *(patent no.: 8,550,113 B1)*
- Stainless steel body option with stainless wetted components provides minimum degradation to cylinder gases.
- Available for both corrosive and non-corrosive service
- Machined bar stock bodies eliminate porosity found in castings
- Reduced particle contamination with 40 Micron stainless steel inlet filter
- Very competitive pricing

The Premier 4903 Series pressure reducing regulator's design is remarkably flexible.
Contact Premier Industries for a custom Premier 4903 Series regulator to meet your exact needs.

4903 SERIES

COMPACT SINGLE STAGE VACUUM ACTUATED

Demand Flow Regulators

SPECIFICATIONS

- **DEMAND PRESSURE:** < 3 " H_2O
- **MAX INLET :** 3000 PSIG
  (with appropriate inlet connection)
- **WEIGHT:**
  - 1.2 lbs *(Stainless Steel Body, Gauge, C10 connection & hose barb)*
  - 0.6 lbs *(Aluminum Body, Gauge, C10 connection & hose barb)*

MATERIALS OF CONSTRUCTION

- **BODY OPTIONS**:
  - 303 Stainless Steel
  - 6061-T6 Aluminum, Clear Anodize
  - SAE 360 Brass, Nickel Plated
- **BONNET**:
  - 6061-T6 Aluminum, Clear Anodize
- **VALVE SEAT** :
  - PTFE *(Standard)*
- **O-RING SEAL OPTIONS**:
  - Viton® *(Standard)*
  - EPDM
  - numerous other compounds available
- **DIAPHRAGM OPTIONS:**
  - Buna-N *(Standard)*
  - Viton®
- **INLET GAUGE OPTIONS:**
  - Brass Socket / Stainless Steel Case *(Standard)*
  - Stainless Steel Socket / Stainless Steel Case

PORTING

- **INTEGRATED INLET PORTING OPTIONS**:
  - 1/4 FNPT *(Standard)*
  - 1/8 FNPT
- **OPTIONAL INLET ADAPTER CONNECTIONS**:
  - C-10 (5/8-18 UNF) *(Standard)*
  - CGA 180
  - CGA 350
  - CGA 330/660
  - CGA 580/590
  - CGA 600
- **OUTLET PORTING OPTIONS**:
  - 3/16" hose barb *(Standard)*
  - 1/4" hose barb
  - 1/8" hose barb
  - 1/4" FNPT
  - 1/8" FNPT

OPTIONAL ITEMS

- CGA Connections
- Porting configuration
- Private label

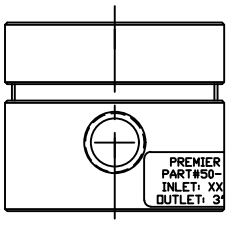

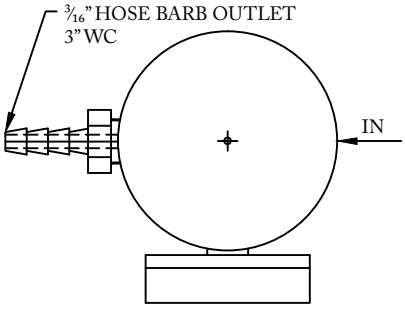

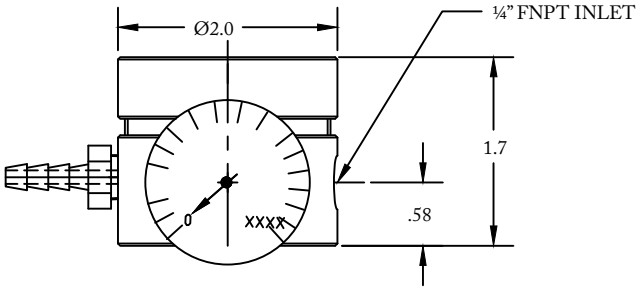

(Part number: 50-12186-X shown above)

ORDERING

- **STANDARD:** part number: 50-12186
- **NON-STANDARD:** P/N assigned per requirements

Viton® is a registered trademark of E.I.duPont de Nemours and Company

MANIFOLDS & CHANGEOVERS

Premier offers a variety of both standard and custom engineered manifold and changeover systems. Premier changeover systems are designed to supply a continuous flow of gas, preventing unnecessary outages, and wasted gas. All of our manifold/changeover systems offer premium versatility offering optional: excess flow valves, check valves, CGA connections, shut-off valves, pigtail hoses, gauges, materials of construction, porting options, mounting brackets, and more. Compact changeover regulators are also available. Contact us if you are looking for a configuration that is not listed, we would be happy to accomodate your request.

MANIFOLDS & CHANGEOVERS

ACS2500 Series *Dual Cylinder Automatic Changeover System* **325**

CR2500 Series *Diaphragm sensed Changeover Regulator* **327**

CS2300 Series *Dual Cylinder, Changeover system with line regulator* **330**

CS2500 Series *Dual Cylinder, Changeover system with line regulator* **333**

M2500 Series *Single Stage Regulator, Manifold system for single or dual cylinder(s)* **335**

M4500 Series *Two Stage Regulator, Manifold system for single or dual cylinder(s)* **337**

PREMIER ACS2500 SERIES

Automatic Changeover System

ACS2500 SERIES

PREMIER INDUSTRIES

1590 99th Ln NE,
Minneapolis, MN 55449
763-786-4020

MADE IN THE USA

Minneapolis, MN

DESCRIPTION

Premier ACS2500 Series automatic changeover system features: 2 Premier 2500 series regulators (one preset and one adjustable) in a compact, wall mountable system. The Premier ACS2500 Series changeover system is designed to provide a continuous flow of gas, preventing outages, and wasted gas. The hand knob can be turned after the depletion of one gas source (arrow pointing towards the line currently in service) allowing you to safely replenish the depleted source not in service. The ACS2500 features Cv 0.20 and a max inlet of 3000 PSIG *(206.84 bar) (dependent upon configuration)*.

FEATURES

- 2 Premier 2500 Series, single stage regulators
- Integrated relief valve
- 316 stainless steel diaphragms
- Stainless steel mounting bracket with four 0.34 x 1.0" slots
- Optional CGA inlet connections
- Optional stainless steel high pressure braided teflon hose
- Optional excess flow prevention valves
- Optional critical alert gauges

The Premier changeover panels are remarkably flexible.
Contact Premier Industries for a custom changeover panel to meet your exact needs.

ACS2500 SERIES

PREMIER ACS2500 SERIES
Automatic Changeover System

STANDARD COMPONENTS

- 2 Premier 2500 Series, single stage regulators
- Integrated relief valve
- Stainless steel mounting bracket

SPECIFICATIONS

- **MAXIMUM INLET PRESSURE:** 3000 PSIG *(206.84 bar)*
  (dependent upon configuration)
- **STANDARD PRESET CONTROL PRESSURE:**
  - 0-200 PSIG x 0-170 PSIG *(preset)*
    (0-13.79 bar x 0-11.72 bar)
- **FLOW (Cv):** 0.20

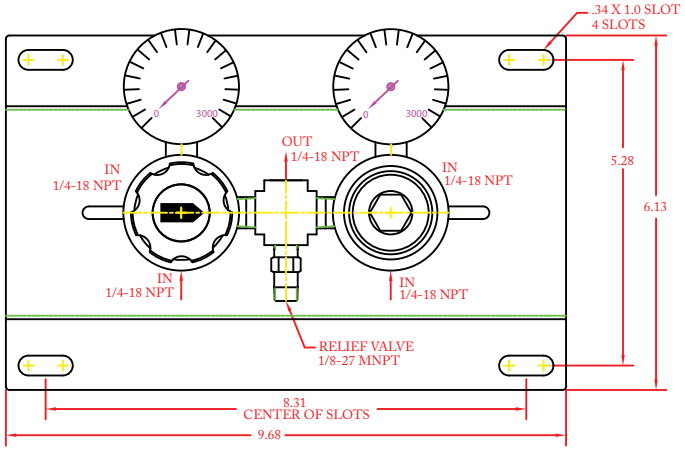

MATERIALS OF CONSTRUCTION

- **BODY:**
  - SAE 360 Brass
  - SAE 360 Brass/Nickel Plated
  - 316 Stainless Steel
  - 6061-T6 Aluminum
- **BONNET:**
  - SAE 360 Brass
  - SAE 360 Brass/Nickel Plated
  - 6061-T6 Aluminum
- **DIAPHRAGM:** 316 Stainless Steel
- **DIAPHRAGM SEALS:** PTFE
- **MAIN VALVE SEAT:** PCTFE
- **MOUNTING BRACKET:** 304 Stainless Steel
- ***(Optional)* HOSE:**
  - Stainless steel braided teflon
- ***(Optional)* CHECK VALVES:**
  - Stainless Steel *(Standard)*
  - SAE 360 Brass

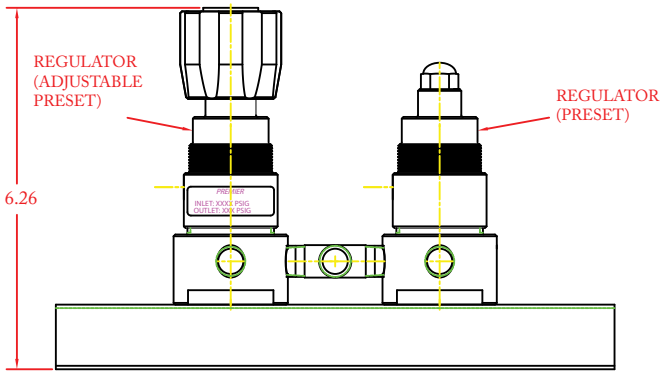

(Part number 50-12240 shown above)

PORTING

- **INLET PORTING:**
  - 1/4-18 NPT *(2 places)*
  - Optional CGA connections
- **OUTLET PORTING:**
  - 1/4-18 NPT

OPTIONS

- Excess flow prevention valves
- CGA connections
- Stainless steel braided teflon hose
- Check valves in stainless steel or brass
- Hoses
- Gauges / critical alert gauges

Contact factory for material certifications. Fees may apply.

PREMIER CR2500 SERIES

Changeover Regulator

CR2500 SERIES

PREMIER INDUSTRIES

1590 99th Ln NE,
Minneapolis, MN 55449
763-786-4020

MADE IN THE USA

Minneapolis, MN

DESCRIPTION

Diaphragm sensed Premier CR2500 Series changeover regulators provide a compact system which supplies a continuous flow of gas, preventing unnecessary outages, and wasted gas. When the primary gas source is consumed, the changeover regulator automatically draws from a secondary supply. The hand knob can be turned after the depletion of one gas source (arrow pointing towards the line currently in service) allowing you to safely replenish the depleted source not in service. The CR2500 Series is fitted with a stainless steel diaphragm, minimizing inboard diffusion. The CR2500 Series has a max inlet of 3000 PSIG *(206.84 bar)*, 5 outlet pressure ranges, and Cv 0.08 or 0.2.

FEATURES

- Stainless steel diaphragm minimizes inboard diffusion of air into regulator
- 3000 psig *(206.84 bar)* max inlet
- Four outlet pressure ranges
- Optional hand knob styles available
- Very competitive pricing
- Compact design (body diameter of 1.5 in. x 5.5 in. long)
- Machined bar stock body eliminates porosity

The Premier CR2500 Series changover regulators are remarkably flexible.
Contact Premier Industries for a custom changeover regulator that will meet your exact needs.

CR2500 SERIES

PREMIER CR2500 SERIES
Changeover Regulator

SPECIFICATIONS

- **MAXIMUM INLET PRESSURE:** 3000 PSIG *(206.84 bar)*
- **OUTLET PRESSURE RANGES:**
  - 0-25 PSIG *(0-1.72 bar)*
  - 0-50 PSIG *(0-3.45 bar)*
  - 0-100 PSIG *(0-6.89 bar)*
  - 0-250 PSIG *(0-17.24 bar)*
  - 0-500 PSIG *(0-34.47 bar)*
- **FLOW (Cv):** 0.08 *(standard)* or 0.2

MATERIALS OF CONSTRUCTION

- **BODY & BONNET OPTIONS:**
  - SAE 360 brass *(body and bonnet)*
  - SAE 360 brass, nickel plated *(body and bonnet)*
  - 316 stainless steel *(body)* SAE 360 brass, nickel plated *(bonnet)*
  - 6061-T6 Aluminum, Clear Anodized *(body and bonnet)*
- **DIAPHRAGM:** 316 Stainless Steel
- **DIAPHRAGM SEAL:** PTFE
- **MAIN VALVE SEAT:** PTFE

PORTING

- **INLET PORTING:**
  - 1/4-18" FNPT
- **OUTLET PORTING:**
  - 1/4-18" FNPT

OPTIONS

- Panel mounting nuts
- Gauges
- Private label

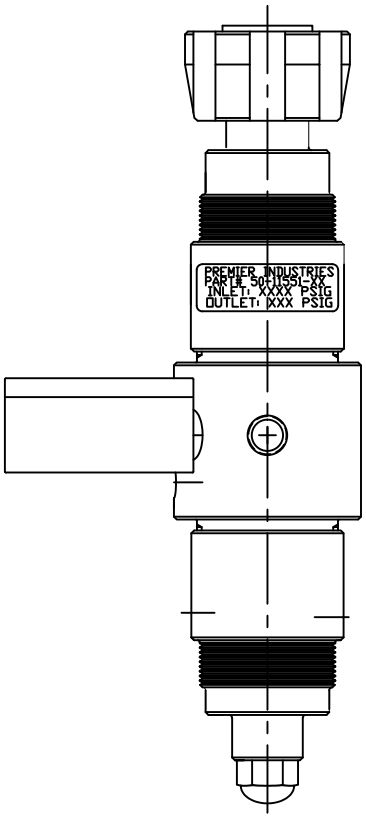

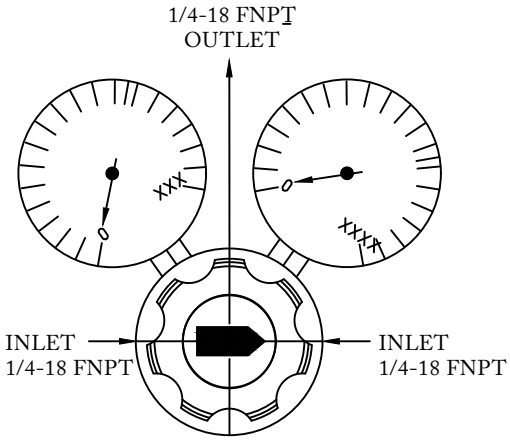

(Part Number: 50-11551 shown in drawings above)

PREMIER CR2500 SERIES

Changeover Regulator

CR2500 SERIES

PART #	-	1	2	3	4
50-11551	-				

1	BODY & BONNET MATERIAL
2	316 stainless steel, cleaned per spec #515 *(body)* SAE 360 brass, nickel plated *(bonnet)*
3	6061-T6 aluminum, clear anodized *(body)* 6061-T6 aluminum, clear anodized *(bonnet)*
5	SAE 360 brass, nickel plated *(body)* SAE 360 brass, nickel plated *(bonnet)*
8	SAE 360 brass *(body)* SAE 360 brass *(bonnet)*
2	**OUTLET PRESSURE**
1	0-25 PSIG *(0-1.72 bar)*
2	0-50 PSIG *(0-3.45 bar)*
3	0-100 PSIG *(0-6.89 bar)*
4	0-250 PSIG *(0-17.24 bar)*
5	0-500 PSIG *(0-34.47 bar)*

3	GAUGES
C	2" diameter inlet, stainless steel wetted gauges
F	2" diameter inlet, brass wetted gauges
K	2" diameter inlet, brass wetted/chrome plated gauges
4	**MAIN VALVE Cv**
blank	Cv 0.08 main valve *(standard)*
Z	Cv 0.2 main valve

PREMIER CS2300 SERIES

Changeover panel with line regulator

CS2300 SERIES

PREMIER INDUSTRIES

1590 99th Ln NE,
Minneapolis, MN 55449
763-786-4020

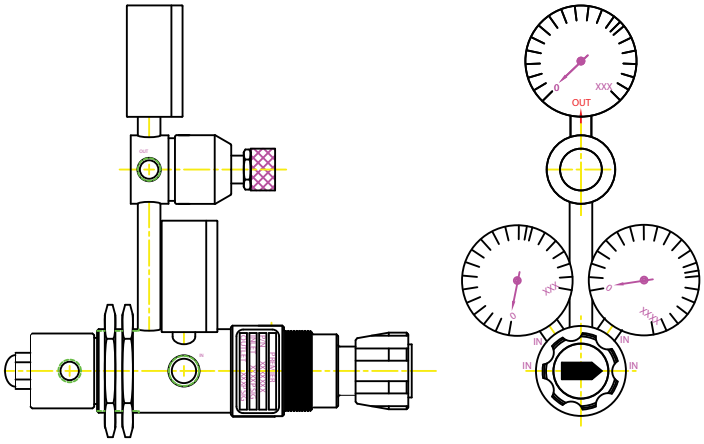

MADE IN THE USA

Minneapolis, MN

DESCRIPTION

The Premier CS2300 Series is an integrated changeover system which combines our changeover regulator and line regulator into a compact, complete, wall mountable system for smooth integration into your desired application. Th Premier CS2300 changeover systems are designed to provide a continuous flow of gas, preventing outages, fluctuations in pressure, and wasted gas. When the primary gas source is consumed, the changeover regulator automatically draws from a secondary supply, whereafter the handknob should be turned to replenish the diminished supply (arrow pointing toward the line in service). The built in line regulator ensures a stable delivery pressure. The CS2500 features Cv 0.08 and a max inlet of 3000 PSIG *(206.84 bar) (dependent upon configuration)*.

FEATURES

- Premier changeover regulator
- Premier 2300 Series line regulator
- Max inlet 3000 PSIG *(206.84 bar)*
- Four max delivery pressures from 25 to 150 PSIG *(1.72 to 10.34 bar)*
- Optional Stainless steel braided teflon hose
- Optional Stainless Steel mounting Bracket with 4 holes for 1/4" screws
- Optional excess flow prevention valves
- Optional critical alert gauges

The Premier changeover systems are remarkably flexible.
Contact Premier Industries for a custom changeover system to meet your exact needs.

CS2300 SERIES

PREMIER CS2300 SERIES

Changeover panel with line regulator

STANDARD COMPONENTS

- 1 - Premier changeover regulator
- 1 - Premier 2300 Series, *line regulator*
- 2 - Panel Mounting Nuts

SPECIFICATIONS

- **MAXIMUM INLET PRESSURE:** 3000 PSIG *(dependent upon configuration)*
- **LINE REGULATOR CONTROL PRESSURE SETTINGS:**
  - 0-25 PSIG *(0-1.72 bar)*
  - 0-50 PSIG *(0-3.45 bar)*
  - 0-100 PSIG *(0-6.89 bar)*
  - 0-150 PSIG *(0-10.34 bar)*
- **FLOW CAPACITY (Cv):** .08

MATERIALS OF CONSTRUCTION

- **BODY:**
  - SAE 360 Brass
  - 316 Stainless Steel
  - 6061-T6 Aluminum/Clear Anodized
  - SAE 360 Brass/Nickel Plated
- **BONNET:**
  - SAE 360 Brass
  - SAE 360 Brass/Nickel Plated
  - 6061-T6 Aluminum/Clear Anodized
- **CHANGEOVER REGULATOR DIAPHRAGM:**
  - 316 Stainles Steel
- **LINE REGULATOR DIAPHRAGM:**
  - Neoprene
- **CHANGEOVER REGULATOR MAIN VALVE SEAT:**
  - PTFE
- **LINE REGULATOR MAIN VALVE SEAT:**
  - Viton®
- **GAUGES** *(Optional)*
  - 2" diameter inlet & outlet gauges, stainless steel wetted gauges
  - 2" diameter inlet & outlet gauges, chrome plated case, brass wetted gauges

PORTING

- **INLET PORTING:**
  - 1/4-18 FNPT *(2 places)*
- **OUTLET PORTING:**
  - 1/8-27 FNPT

OPTIONS

- Excess flow prevention valves
- CGA connections
- Stainless steel braided teflon hose
- Stainless steel mounting bracket with 4 holes for 1/4" screws
- Check valves in stainless steel or brass
- Gauges / critical alert gauges

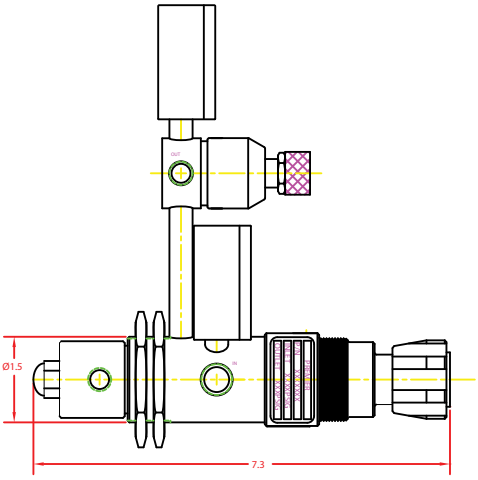

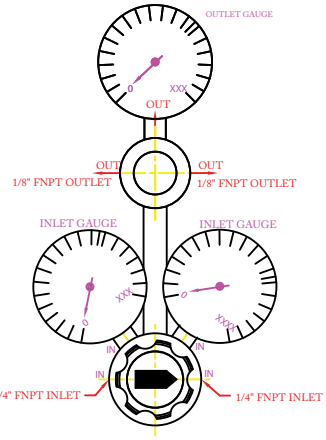

(Part number: 50-11491 shown above)

Viton® is a registered trademark of E.I.duPont de Nemours and Company

PREMIER CS2300 SERIES

Changeover panel with line regulator

CS2300 SERIES

PART #	-	1	2	3
50-11491	-			

1	**BODY MATERIAL**
1	SAE 360 Brass
2	316 Stainless Steel
3	6061-T6 Aluminum, *Clear anodized*
4	SAE 360 Brass, *Nickel Plated*
2	**OUTLET PRESSURE**
1	0-25 PSIG *(0-1.72 bar)*
2	0-50 PSIG *(0-3.45 bar)*
3	0-100 PSIG *(0-6.89 bar)*
4	0-150 PSIG*(0-10.34 bar)*
3	**FACTORY SET RELIEF PRESSURE** *IN PSIG / 10*
C	2" diameter inlet & outlet stainless steel wetted gauges
J	2" diameter inlet & outlet chrome plated, brass wetted gauges

Contact factory for material certifications. Fees may apply.

PREMIER CS2500 SERIES

Changeover panel with line regulator

CS2500 SERIES

PREMIER INDUSTRIES

1590 99th Ln NE,
Minneapolis, MN 55449
763-786-4020

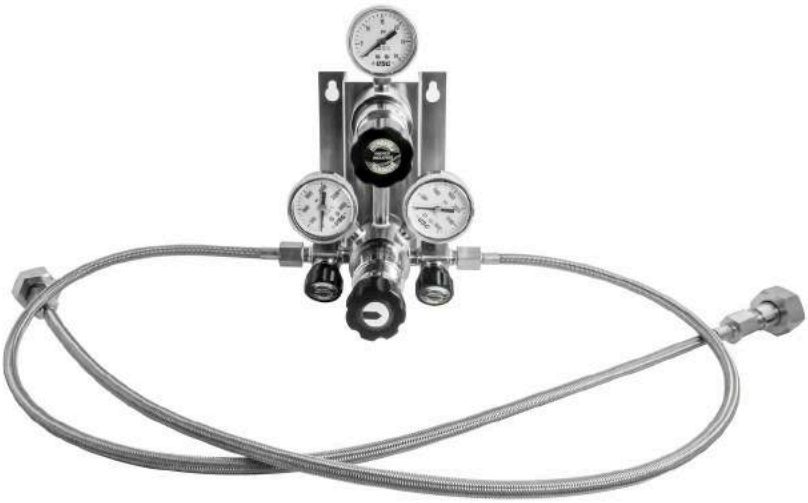

MADE IN THE USA

Minneapolis, MN

DESCRIPTION

The Premier CS2500 Series changeover system combines one Premier changeover regulator, and one Premier 2500 Series line regulator into a compact, wall mountable system. The Premier CS2500 Series changeover system supplies a continuous flow during cylinder changeover. When the primary gas source is consumed, the changeover regulator automatically draws from a secondary supply, thereby preventing outages, fluctuations in pressure, and wasted gas. The hand knob can be turned after the depletion of one gas source (arrow pointing towards the line currently in service) allowing you to safely replenish the depleted source not in service. The built in line regulator ensures a stable delivery pressure. The CS2500 features Cv 0.08 and a max inlet of 3000 PSIG (*206.84 bar) (dependent upon configuration)*.

FEATURES

- 1 Premier changeover regulator
- 1 Premier 2500 series line regulator
- 2 Check valves in stainless steel or Brass
- 1 Stainless Steel mounting Bracket with 4 holes for 1/4" screws
- Stainless steel diaphragms minimize inboard diffusion
- Optional excess flow prevention valves
- Optional integrated outlet shut off valve
- Optional critical alert gauges

The Premier changeover panels are remarkably flexible.
Contact Premier Industries for a custom changeover panel to meet your exact needs.

CS2500 SERIES

PREMIER CS2500 SERIES

Changeover panel with line regulator

STANDARD COMPONENTS

- 1 Premier changeover regulator
- 1 Premier 2500 Series line regulator
- 1 Stainless Steel mounting Bracket with 4 holes for 1/4" screws
- 2 Check valves in Stainless Steel or Brass

SPECIFICATIONS

- **MAXIMUM INLET PRESSURE:** 3000 PSIG *(dependent upon configuration)*
- **STANDARD PRESET CONTROL PRESSURE:**
  - 0-10 PSIG *(0-0.69 bar)*
  - 0-25 PSIG *(0-1.72 bar)*
  - 0-50 PSIG *(0-3.45 bar)*
  - 0-100 PSIG *(0-6.89 bar)*
  - 0-250 PSIG *(0-17.24 bar)*
  - 0-500 PSIG *(0-34.47 bar)*
- **Cv:** 0.08

MATERIALS OF CONSTRUCTION

- **BODY:**
  - SAE 360 Brass
  - 316 Stainless Steel
  - 6061-T6 Aluminum, Clear Anodized
  - SAE 360 Brass, Nickel Plated
- **BONNET:**
  - SAE 360 Brass
- **DIAPHRAGMS:** 316 Stainless Steel
- **DIAPHRAGM SEALS:** PTFE
- **MAIN VALVE SEATS:** PTFE
- **MOUNTING BRACKET:**
  - 304 Stainles Steel
- **CHECK VALVE:**
  - Stainless Steel *(Standard)*
  - SAE 360 Brass
- *(Optional)* **HOSE:**
  - Stainless steel braided Teflon®

PORTING

- **INLET PORTING:** 1/4-18 FNPT
- **OUTLET PORTING:** 1/4-18 FNPT
- **CGA CYLINDER CONNECTIONS AVAILABLE:**
  - CGA350
  - CGA 590
  - CGA 660
  - CGA 705
  - CGA 330

OPTIONS

- Excess flow prevention valves
- Hoses
- CGA connections
- Gauges / critical alert gauges
- Integrated outlet shut off valve
- Inlet shut off valves (stainless steel w/ Viton® seals)

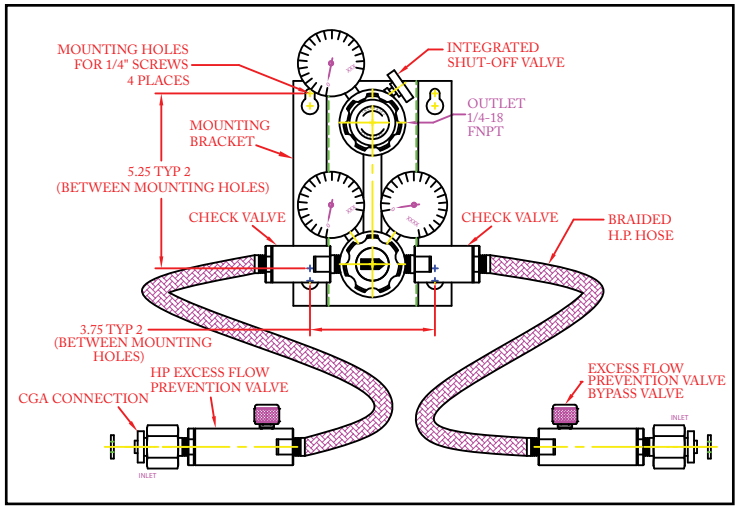

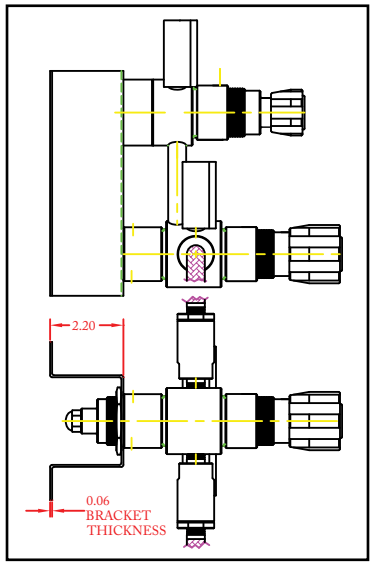

(Part number: 50-12013 shown above)

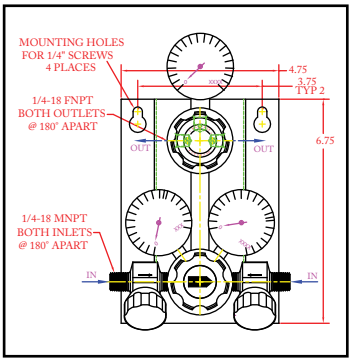

(P/N: 50-11800 shown above with shut off valves)

Viton® and Teflon® are registered trademarks of E.I.duPont de Nemours and Company
Contact factory for material certifications. Fees may apply.

PREMIER M2500 SERIES

Manifold with single stage regulator

M2500 SERIES

PREMIER INDUSTRIES

1590 99th Ln NE,
Minneapolis, MN 55449
763-786-4020

MADE IN THE USA

Minneapolis, MN

DESCRIPTION

Premier M2500 manifolds provide easy point of use installation to one or two cylinders. Premier M2500 Series manifolds are available in both stainless steel and brass, to accommodate use with a broad range of non-corrosive and corrosive media.

Standard M2500 Series manifolds include: one 2500 Series single stage regulator, one stainless steel mounting bracket, check valve(s), and optional excess flow prevention valves, hoses, integrated shut off valves and cga connections. The M2500 Series manifold provides everything you need in one compact assembly.

FEATURES

- Premier 2500 Series, single stage regulator
- Stainless Steel mounting Bracket with 4 holes for 1/4" screws
- Check valve(s) *(standard)*
- Optional pigtails/hoses (for service to one or two cylinders)
- Optional integrated Shut Off Valve
- Optional CGA inlet connections
- Optional excess flow prevention valves
- Optional critical alert gauges

Premier manifolds are remarkably flexible.
Contact Premier Industries for a custom manifold to meet your exact needs.

M2500 SERIES

PREMIER M2500 SERIES

Manifold with single stage regulator

STANDARD COMPONENTS

- 1 Premier 2500 Series, two stage regulator
- 1 Stainless Steel mounting Bracket with 4 holes for 1/4" screws
- Check valve(s) in brass or stainless steel

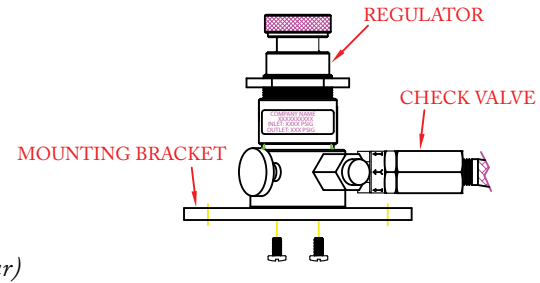

SPECIFICATIONS

- **MAXIMUM INLET PRESSURE:** 3000 PSIG *(206.84 bar)*
  (dependent upon configuration)
- **STANDARD PRESET CONTROL PRESSURE:**
  - 0-100 PSIG
    (0-6.89 bar)
- **MAX PROCESS FLOW RATE:** 3.5 SLPM

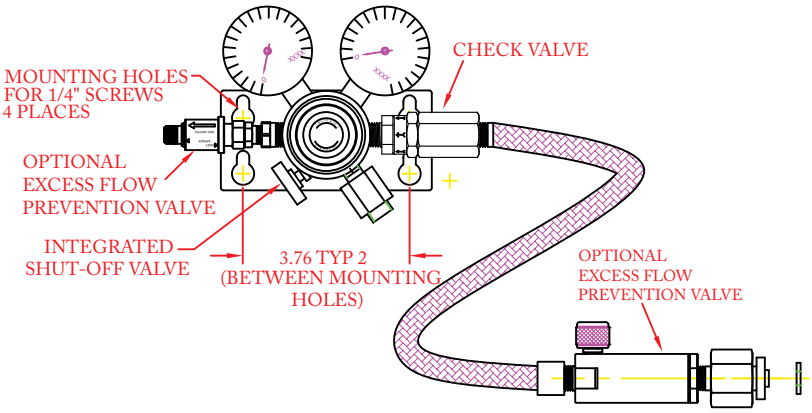

(Part number: 50-12099 shown above)

MATERIALS OF CONSTRUCTION

- **BODY OPTIONS:**
  - body diameters of 1.5", 1.75", and 2.0"
  - SAE 360 Brass, Bright Dip
  - SAE 360 Brass, Nickel Plated
  - 316 Stainless Steel
- **SEALS:**
  - PTFE
  - Viton A®
- **MOUNTING BRACKET:**
  - 304 Stainles Steel
- **PIGTAIL/HOSE OPTIONS:**
  - Single cylinder
  - Dual cylinder
- **CHECK VALVE:**
  - SAE 360 Brass, Viton® Seal *(Standard)*
  - Stainless Steel

PORTING

- **INLET PORTING:**
  - 1/4-18 FNPT
- **CYLINDER CONNECTIONS AVAILABLE:**
  - CGA 350,590, 660, 705, 330, 580
- **OUTLET PORTING:**
  - 1/4-18 FNPT

OPTIONS

- Excess flow prevention valves
- CGA connections
- Hose pigtails (for service to one or two cylinders)
- Integrated shut-off valve
- Gauges / critical alert gauges

Viton® is a registered trademark of E.I.duPont de Nemours and Company
Contact factory for material certifications. Fees may apply.

PREMIER M4500 SERIES

Manifold with two stage regulator

M4500 SERIES

PREMIER INDUSTRIES

1590 99th Ln NE,
Minneapolis, MN 55449
763-786-4020

MADE IN THE USA

Minneapolis, MN

DESCRIPTION

Premier M4500 manifolds provide easy point of use installation to one or two cylinders. Premier M4500 Series manifolds are available in both stainless steel and brass, to accommodate use with a broad range of non-corrosive and corrosive media.

Standard M4500 Series manifolds include: one 4500 Series two stage regulator, one stainless steel mounting bracket, one check valve, and optional excess flow prevention valves, hoses, integrated shut off valves and cga connections. The M4500 Series manifold provides everything you need in one compact assembly.

FEATURES

- Premier 4500 Series, two stage regulator
- Stainless Steel mounting Bracket with 4 holes for 1/4" screws
- Check valve(s) *(standard)*
- Optional pigtails/hoses (for service to one or two cylinders)
- Optional integrated Shut Off Valve
- Optional CGA inlet connections
- Optional excess flow prevention valves
- Optional critical alert gauges

Premier manifolds are remarkably flexible.
Contact Premier Industries for a custom manifold to meet your exact needs.

M4500 SERIES

PREMIER M4500 SERIES

Manifold with two stage regulator

STANDARD COMPONENTS

- 1 Premier 4500 Series, two stage regulator
- 1 Stainless Steel mounting Bracket with 4 holes for 1/4" screws
- Check valve(s) in brass or stainless steel

SPECIFICATIONS

- **MAXIMUM INLET PRESSURE:** 3000 PSIG *(206.84 bar)* *(dependent upon configuration)*
- **CONTROL PRESSURE RANGES:**
  - 1-25 PSIG *(0.07-1.72 bar)*
  - 1-50 PSIG *(0.07-3.45 bar)*
  - 5-100 PSIG *(0.34-6.89 bar)*
- **FLOW (Cv):** 0.08

MATERIALS OF CONSTRUCTION

- **BODY & BONNET OPTIONS:**
  - SAE 360 Brass, Bright Dip
  - SAE 360 Brass, Electroless Nickel Plated
  - 316 Stainless Steel
- **DIAPHRAGM OPTIONS:**
  - Neoprene
  - 316 Stainless Steel
- **SEALS:**
  - PTFE
  - Viton A®
- **MOUNTING BRACKET:**
  - 304 Stainles Steel
- **PIGTAIL/HOSE OPTIONS:**
  - Single cylinder
  - Dual cylinder
- **CHECK VALVE OPTIONS:**
  - SAE 360 Brass, Viton® Seal *(Standard)*
  - Stainless Steel

PORTING

- **INLET PORTING:**
  - 1/4-18 FNPT
- **CYLINDER CONNECTIONS AVAILABLE:**
  - CGA 350,590, 660, 705, 330
- **OUTLET PORTING:**
  - 1/4-18 FNPT

OPTIONS

- Excess flow prevention valves
- CGA connections
- Hose pigtails (for service to one or two cylinders)
- Integrated shut-off valve
- Gauges / critical alert gauges

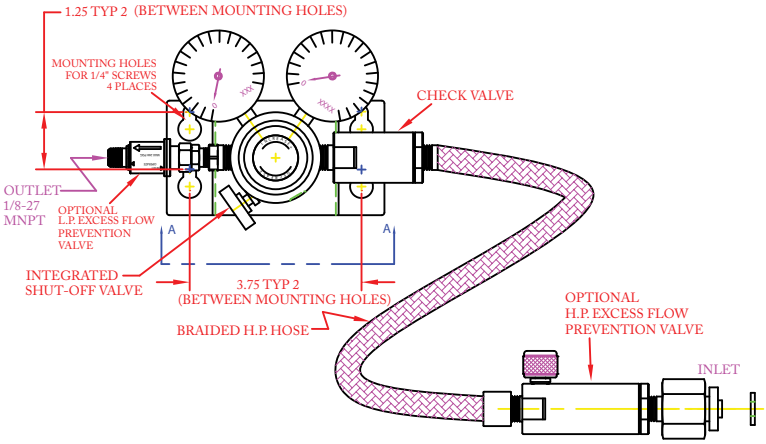

(Part number: 50-12015 shown above)

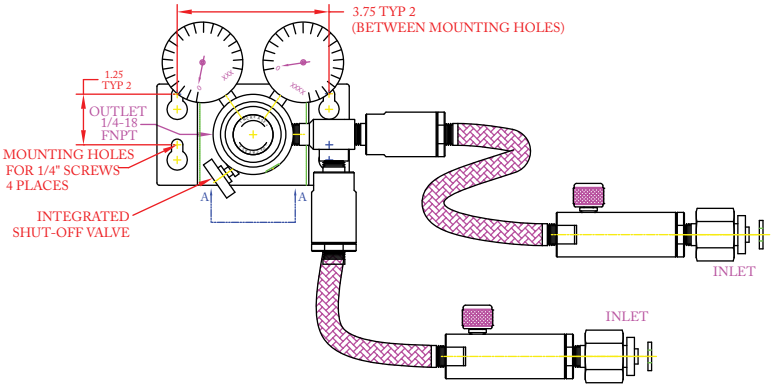

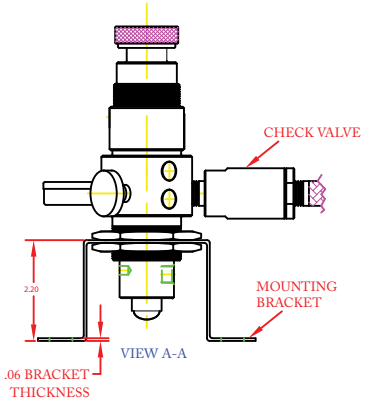

(Part number: 50-12012 shown above)

Viton® is a registered trademark of E.I.duPont de Nemours and Company
Contact factory for material certifications. Fees may apply.

VALVES

Premier offers an assortment of high quality proprietary valves designed for use in a variety of industries worldwide. All of our valves are machined from barstock materials for superior quality and reliability. If you do not see a valve in our standard series that meets your needs, please contact us for a custom design or modification.

VALVES

AO Valves	*Air operated, Normally Open / Normally Closed High Pressure Valve*	**341**
Excess Flow Valves	*Miniature, high pressure, and high sensitivity excess flow valves*	**344**
Stainless Steel Shut Off Valves	*Manual Stainless Steel Shut Off Valves*	**348**
Miniature Brass Shut Off Valves	*Miniature, Brass, Manual Shut Off Valves*	**352**
Flow Sight Tube Valves	*Needle Style Shut Off Valve with acrylic flow meter*	**354**
70A Series	*High Pressure, Angle Pattern Shut Off Valves*	**356**
70AB Series	*High Pressure Shut Off Valve With Bleed/Vent Valve*	**359**
Relief Valves	*Relief Valve*	**362**
PA32 Series	*Pneumatically Actuated, Three Way Valve*	**365**

AIR OPERATED NORMALLY OPEN/CLOSED

Valves

AO.8 SERIES

PREMIER INDUSTRIES

1590 99th Ln NE,
Minneapolis, MN 55449
763-786-4020

MADE IN THE USA

Minneapolis, MN

DESCRIPTION

The Premier AO Series, Air Operated Valve is designed for both normally open and normally closed use with gas or hydraulic media. This valve is rated for operating pressures up to 10000 psig / 689.5 bar, Cv 0.8, and features an actuating pressure range of 100-150 psig / *6.89-10.3 bar*. Compatible with electro-pneumatic controllers.

FEATURES

- Low actuation pressure: 100 psig / 6.89 bar
- Maximum inlet pressure of 10000 psig / 689.5 bar
- Cv: 0.8
- Stainless steel body
- Compatible with electro-pneumatic controllers
- Optional solenoid adapter

The Premier air operated valves design is remarkably flexible.
Contact Premier Industries for a custom air operated valve to meet your exact needs.

AIR OPERATED NORMALLY OPEN/CLOSED
Valves

AO.8 SERIES

SPECIFICATIONS

- **MAXIMUM INLET PRESSURE :** 10000 psig / 689.5 bar *(Stainless Steel)*
- **ACTUATION PRESSURE RANGE:** 100-150 psig *(6.89-10.3 bar)*
- **FLOW (Cv):** 0.8 *(Medium pressure porting is only available with Cv 0.2)*

MATERIALS OF CONSTRUCTION

PROCESS SIDE WETTED:

- **BODY/INSERT**:
  - 316 Stainless Steel
  - 303 Stainless Steel
- **MAIN VALVE SEAT**:
  - Vespel Sp-1®
- **MAIN VALVE STEM**: 17-4 Stainless Steel
- **O-RINGS**:
  - Buna-n
  - Viton-A®
  - EPDM
  - Kalrez® *Contact factory for pricing*
- **LUBRICANT**
  - Krytox 240AC *(standard)*
  - Molykote 44 Medium *(special mod)*

ACTUATOR SIDE WETTED:

- **PISTON, PLUG & BONNET**
  - 303 Stainless Steel

NON-WETTED :

- **BACK-UP RINGS**
  - PTFE
  - PEEK®

PORTING :

- **INLET & OUTLET OPTIONS**
  - 1/4" FNPT
  - 3/8" FNPT
  - SAE AS5202-04
  - 1/4" Medium pressure *(only available with Cv 0.2)*
- **ACTUATION PORT:**
  - 1/8" FNPT *(standard)*

OPTIONS

- Private label
- Indicator switch
- Solenoid valve
- Gauge/auxiliary ports

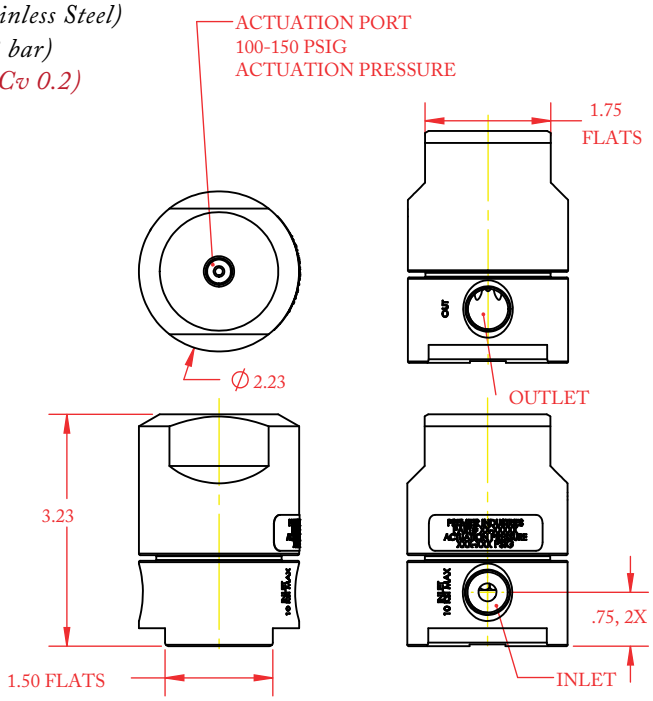

(P/N: 70-00347-X-XX-21 shown above)

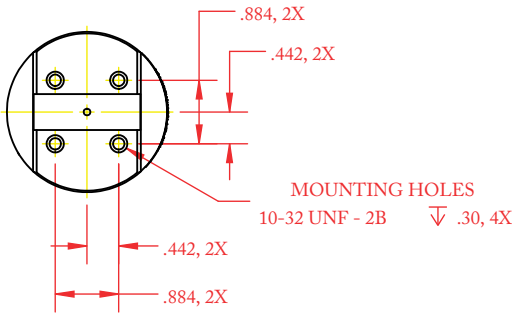

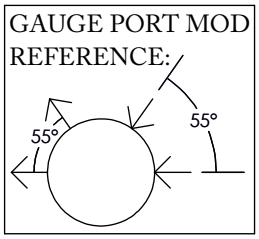

Kalrez®, Vespel® & Viton® are registered trademarks of E.I.duPont de Nemours and Company.
PEEK® is a registered trademark of Victrex PLC

AIR OPERATED NORMALLY OPEN/CLOSED

Valves

AO.8 SERIES

PART #	-	1	-	2	3	-	4	5	-	MODS (OPTIONAL)
70-00347	-		-			-			-	

1	TYPE
1	Normally Closed
2	Normally Open
2	**BODY/INSERT MATERIAL**
1	303 Stainless Steel
2	316 Stainless Steel
3	**O-RING MATERIAL**
1	Buna-n
2	Viton®
3	EPDM
4	Kalrez® *Contact factory for pricing*

4	PROCESS PORTS (& GAGE)
1	1/4 FNPT
2	3/8 FNPT
3	SAE AS5202-04
4	1/4 MEDIUM PRESSURE *(Medium pressure porting is only available with Cv 0.2)*
5	**ACTUATION PORT**
1	1/8 FNPT

SPECIAL MODS**	
OMITTED	NONE
1	INDICATOR SWITCH
2	SOLENOID VALVE ACTUATOR
3	GAUGE PORTS
4	MOLYKOTE 44 MEDIUM LUBRICANT

**CONSULT PREMIER INDUSTRIES IF ORDERING SPECIAL MODS, OR IF UNLISTED CONFIGURATIONS ARE REQUIRED.
ADD ALL MODS TO END OF PART# (EX. 70-00347-1-12-41-13)

Kalrez® & Viton® are registered trademarks of E.I.duPont de Nemours and Company.

MINIATURE HIGH PRESSURE & HIGH SENSITIVITY

Excess Flow Prevention Valves

EXCESS FLOW VALVES

PREMIER INDUSTRIES

1590 99th Ln NE,
Minneapolis, MN 55449
763-786-4020

Miniature | **EFPV**
(P/N: 70-00186)

High Pressure | **EFPV_HP**
(P/N: 70-00194)

High Sensitivity | **EFPV_HS**
(P/N: 70-00233)

MADE IN THE USA
Minneapolis, MN

DESCRIPTION

Premier Excess Flow Prevention Valves are unique factory adjustable gas valves designed to automatically shut off the flow of gas when flow exceeds a preset level. These valves are designed to protect systems and/or people in the event of a line failure down the stream from a valve.

Premier excess flow valves are available in three unique designs. The miniature EFPV operates on systems between 30 and 200 PSIG *(2.07 and 13.79 bar)*, offering a wide range of factory adjustable trip points. The high pressure EFPV_HP includes all the features of the EFPV with an extended operating range (100 to 3000 PSIG / *6.89 - 206.84 bar*). The high sensitivity EFPV_HS valve is ten times more sensitive than the aforementioned models, offering an extended low range system pressure down to 5 PSIG *(0.34 bar)* and the lowest settable trip-point of the three valves. Flow rates can be preset at the factory location to meet customer specifications.

After a valve has tripped it can be reset with a convenient integrated reset valve / slider that will allow users to quickly get their systems back up and running *(after repairing the leak which caused the valve to trip)*. Premier Excess Flow Valves are remarkably flexible with a variety of available construction materials, multiple porting configurations, a wide range of operating pressures and factory adjustable trip points.

FEATURES

- Factory adjustable flow trip point
- Convenient integrated bypass valve/reset slider
- Inlet pressures up to 3000 PSIG *(172.37 bar) (EFPV_HP)*
- Complete shut off when tripped (no bleed)
- High Sensitivity model can trip with a pressure differential under 5 PSIG *(0.34 bar)* (EFPV_HS)
- Compact size (EFPV)
- Very competitive pricing
- Models are available for both corrosive and non-corrosive service
- Machined bar stock bodies eliminate porosity found in castings

The Premier excess flow prevention valves design is remarkably flexible.
Contact Premier Industries for a custom excess flow prevention valve to meet your exact needs.

EXCESS FLOW VALVES

MINIATURE EFPV

Excess Flow Prevention Valves

SPECIFICATIONS

- **OPERATING RANGE:** 30 - 200 PSIG *(2.07-13.79 bar)*
- **LEAK RATE:** Bubble tight with nitrogen gas
- **FLOW TRIP POINT:** adjustable at factory location to meet customer specifications *(see chart for capabilities)*
- **WEIGHT:** approx. .15 lbs

MATERIALS OF CONSTRUCTION

- **WETTED COMPONENTS****:
  - 6061-T6 Aluminum/ Clear Anodized
  - 303 Stainless Steel
  - SAE 360 BRASS/Bright Dip
- **SEALS**:
  - Viton®
  - BUNA-N
  - Neoprene
  - EPDM

PORTING

- **INLET CONNECTION**:
  - 1/8-27 NPT
- **OUTLET CONNECTION**:
  - 1/8-27 NPT

OPTIONS

- Anodized Colors for Aluminum Bodies
- Private Label

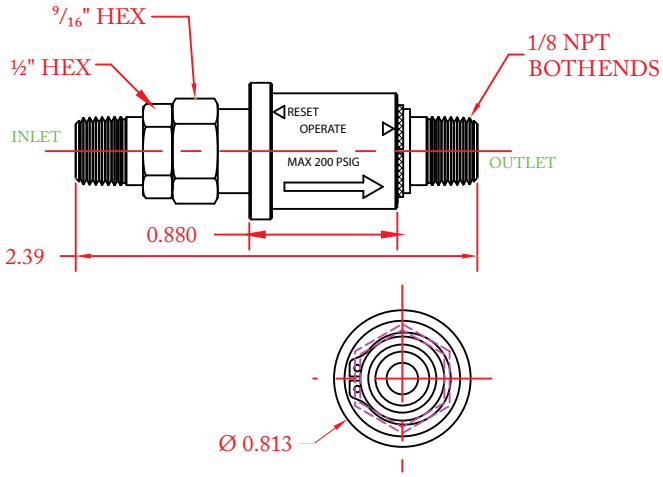

(Part number: 70-00186 shown above)

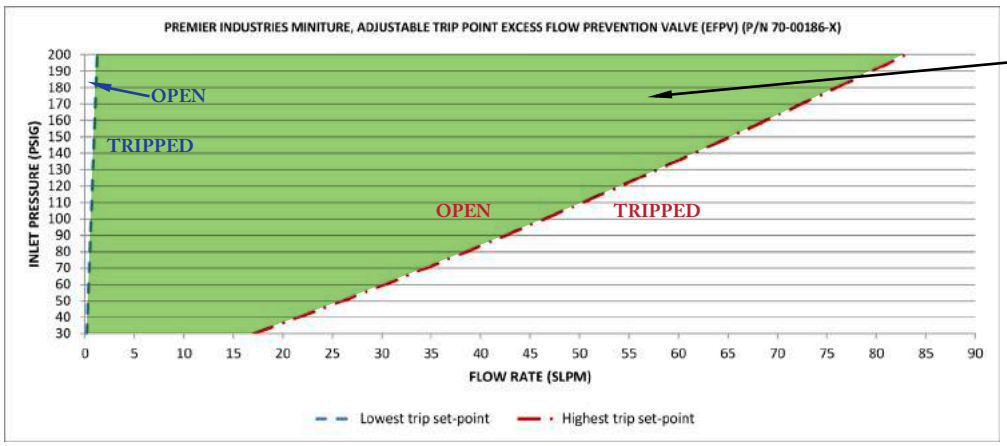

The trip point can be set anywhere within the shaded green area.

Flow rates indicated reflect valve capabilities using nitrogen gas.

Viton® is a registered trademark of E.I.duPont de Nemours and Company

***Stainless steel components also used in aluminum & brass options*

Contact factory for material certifications. Fees may apply.

EXCESS FLOW VALVES

HIGH PRESSURE EFPV_HP

Excess Flow Prevention Valves

SPECIFICATIONS

- **MAXIMUM INLET PRESSURE:** 100 - 3000 PSIG *(6.89 - 206.84 bar)*
- **LEAK RATE:** Bubble tight with nitrogen gas
- **FLOW TRIP POINT :** Adjustable at factory location to meet customer specifications *(see chart for capabilities)*
- **WEIGHT:** approximately .75 lbs

MATERIALS OF CONSTRUCTION

- **PISTON**: 303 Stainless Steel
- **NEEDLE VALVE**: 18-8 Stainless Steel
- **BYPASS STEM AND NUT**: 303 stainless steel
- **BYPASS VALVE KNOB**: 6061-T6 Aluminum/black anodized
- **SPRING**: 300 series stainless steel
- **SEAL MATERIAL**:
  - BUNA-N
  - Viton-A®
  - Neoprene
  - EPDM

PORTING

- **INLET CONNECTION OPTIONS**:
  - 1/4-18 FNPT
  - 1/4-18 MNPT
- **OUTLET CONNECTION OPTIONS**:
  - 1/4-18 FNPT
  - 1/4-18 MNPT

OPTIONS

- Anodized Colors for Aluminum Bodies & Bonnets
- Private Label

M/M PORTING

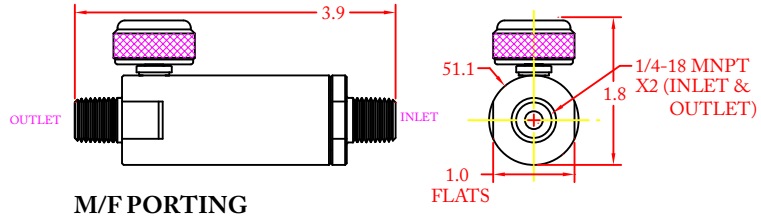

M/F PORTING

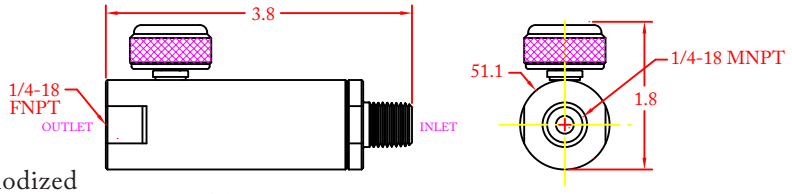

F/M PORTING

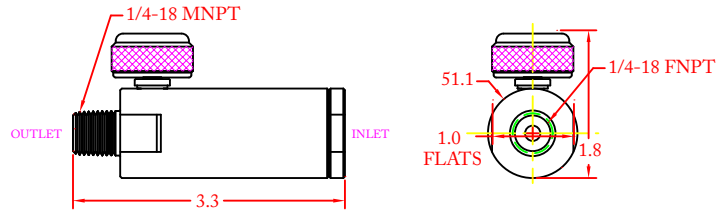

F/F PORTING

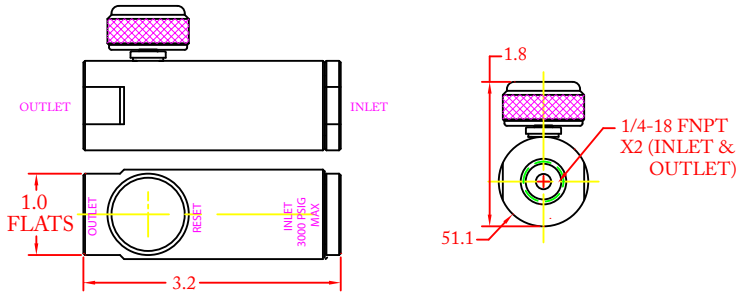

(Part number: 70-00194 shown above)

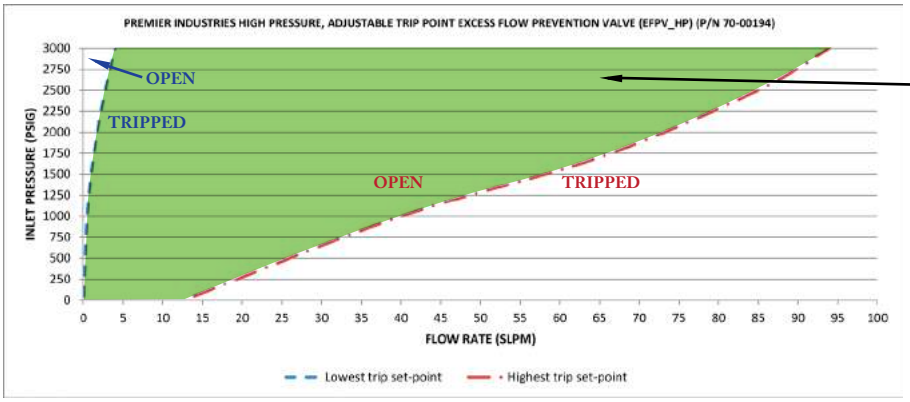

The trip point can be set anywhere within the shaded green area.

Flow rates indicated reflect valve capabilities using nitrogen gas.

Viton-A® is a registered trademarks of E.I.duPont de Nemours and Company
***Stainless steel components also used in aluminum option*
Contact factory for material certifications. Fees may apply.

EXCESS FLOW VALVES

HIGH SENSITIVITY EFPV_HS

Excess Flow Prevention Valves

SPECIFICATIONS

- **OPERATING RANGE:** 5 - 200 PSIG *(0.34 - 13.79 bar)*
- **LEAK RATE:** Bubble tight with nitrogen gas
- **FLOW TRIP POINT:** adjustable at factory location to meet customer specifications

MATERIALS OF CONSTRUCTION

- **WETTED MATERIALS****:
  - 6061-T6 Aluminum / Clear Anodized
  - 303 Stainless Steel
  - SAE 360 Brass / Bright Dip
- **SEAL MATERIAL**:
  - BUNA-N
  - Viton-A®
  - Neoprene
  - EPDM

PORTING

- **INLET CONNECTION**:
  - 1/8-27 NPT
- **OUTLET CONNECTION**:
  - 1/8-27 NPT

OPTIONS

- Anodized Colors for Aluminum Bodies
- Private Label

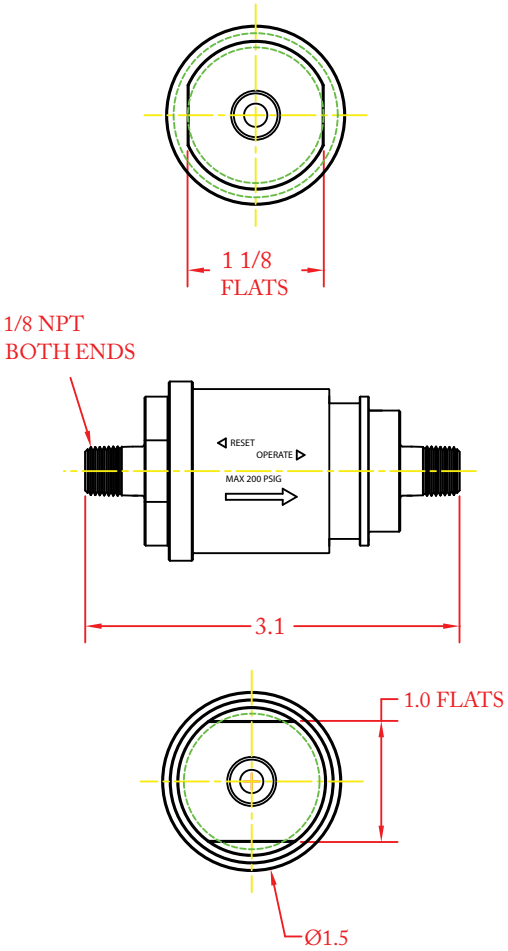

(Part number: 70-00233 shown above)

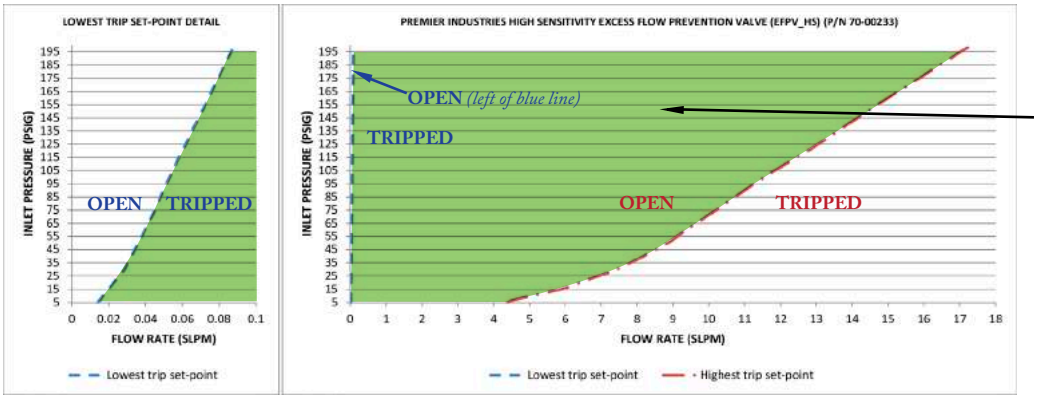

The trip point can be set anywhere within the shaded green area.

Flow rates indicated reflect valve capabilities using nitrogen gas.

Viton® is a registered trademarks of E.I.duPont de Nemours and Company
***Stainless steel components also used in aluminum & brass options*
Contact factory for material certifications. Fees may apply.

STAINLESS STEEL SOFT SEAT
Shut Off Valves

SHUT OFF VALVES

PREMIER INDUSTRIES

1590 99th Ln NE,
Minneapolis, MN 55449
763-786-4020

MADE IN THE USA
Minneapolis, MN

DESCRIPTION

The Premier stainless steel shut-off valve is part of a family of manual, high pressure, shut off valves. This valve features a stainless steel body, soft seat, 17-4 stainless steel valve stem, and a flow Cv of 0.25. Optional integrated burst disks, and relief valves are available.

Stainless shut-off valves may be used in a wide variety of applications as compatible with their materials of construction.

FEATURES

- Compact Size
- PCTFE or PEEK® seat
- Maximum inlet pressure of 3000 PSI *(206.84 bar)*
- Cv of 0.25
- 316 stainless steel body and valve nut
- Optional pressure relief devices
- Optional dip tube
- Economical pricing
- Machined bar stock bodies eliminate porosity found in castings

The Premier Stainless Steel Shut Off Valves design is remarkably flexible.
Contact Premier Industries for a custom Premier Stainless Steel Shut Off Valve to meet your exact needs.

SHUT OFF VALVES

STAINLESS STEEL SOFT SEAT

Shut Off Valves

SPECIFICATIONS

- **MAX INLET PRESSURE :** 3000 PSIG *(206.84 bar)*
- **WEIGHT:** 0.4-0.5 lbs
- **LEAK RATE:** Bubble Tight
- **FLOW (Cv):** 0.25

MATERIALS OF CONSTRUCTION

- **BODY & VALVE NUT**:
  - 316 Stainless Steel
- **VALVE STEM**: 17-4 Stainless Steel
- **SEAT:** PCTFE, PEEK®
- **O-RINGS**: Viton®, EPDM, Low-temp Nitrile
- **BACK-UP RING**: PTFE
- **BORE SIZE**: Ø 1/8”
- **OPTIONAL DIP TUBE**: 316 Stainless steel
- **HAND KNOB**: 6061-T6 Aluminum/ black anodized

PORTING

- **INLET**:
  - 1/4-18 MNPT
- **OUTLET:**
  - 1/4-18 MNPT

OPTIONS

- Dip tube, 1/16-27 FNPT (order separately)
- SilcoNert 2000® coating of wetted materials
- Relief Valve (600 PSIG or 1800 PSIG) *(41.37 bar or 124.11 bar)*
- Burst Disk (1700 PSIG) *(117.2 bar)*
- Pressure marking/labeling

KNOB **T-HANDLE**

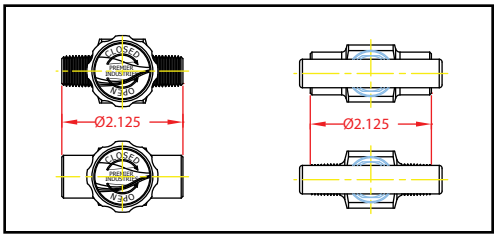

WITHOUT PRESSURE RELIEF DEVICE

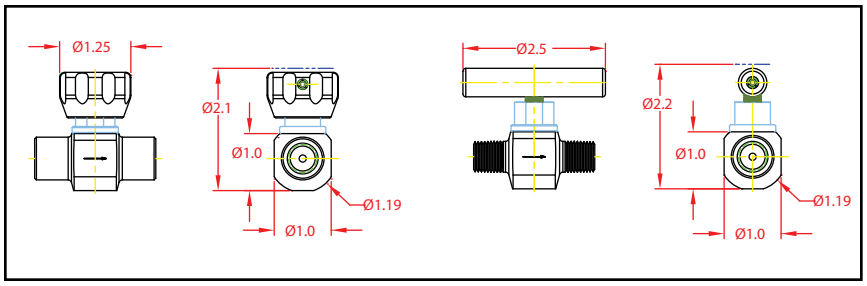

WITH BURST DISK

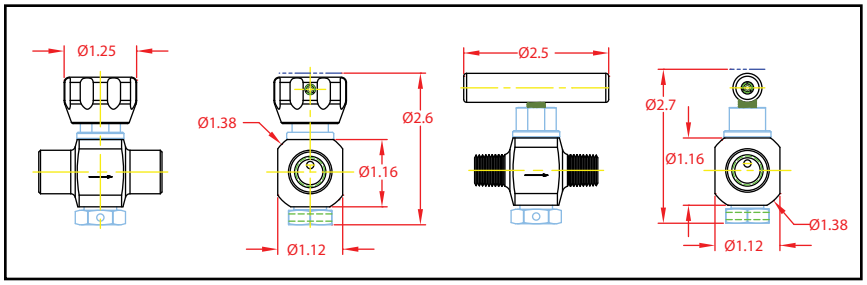

WITH RELIEF VALVE

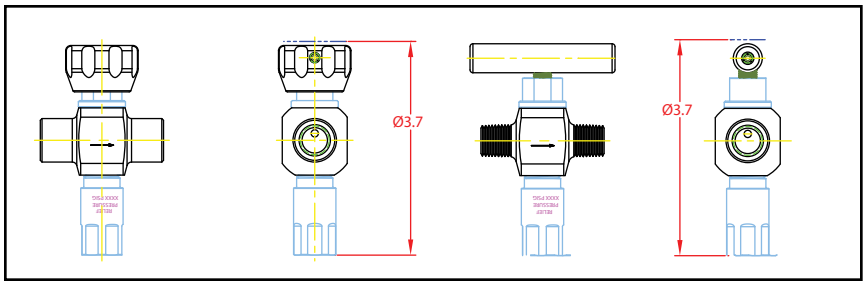

Part Number: 70-00158 (without pressure relief device)
Part Number: 70-00157 (with burst disk or relief valve)

Viton® is a registered trademark of E.I.duPont de Nemours and Company
SilcoNert® is a registered trademark of SilcoTek
PEEK® is a registered trademark of Victrex PLC

STAINLESS STEEL SOFT SEAT
Shut Off Valves

SHUT OFF VALVES

VALVE WITH PRESSURE RELIEF DEVICE

SERIES	1 2	-	3	4	-	5	6	7	8
70-00157		-			-				

1 2	BODY TYPE
FF	1/4" FNPT inlet 1/4" FNPT outlet 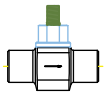 1
MF	1/4" MNPT inlet 1/4" FNPT outlet 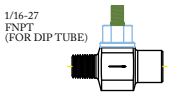
MM	1/4" MNPT inlet 1/4" MNPT outlet 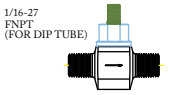
3	**O-RING MATERIAL** 2
E	EPDM
V	Viton®
N	Nitrile, lo-temp
4	**SEAT MATERIAL** 2
1	PCTFE
2	PEEK®

5	PRESSURE RELIEF DEVICE
1	1700 psig burst disc 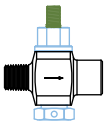
2	600 psig relief valve 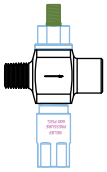
3	1800 psig relief valve 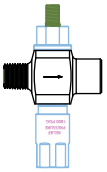
6	**COATING**
0	No coating
1	Silconert 200 (sulfinert®)

7	HANDLE STYLE
1	Knob
2	T-handle 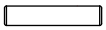
8	**LABEL/ PRESSURE MARKING**
2	Premier knob label 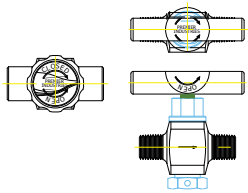

NOTE:

1. DIP TUBES ARE NOT COMPATIBLE WITH 'FF' STYLE VALVES.
2. SEE MATERIAL TEMPERATURE RATINGS TABLE. BE SURE TO CONSIDER ALL VALVE MATERIALS

MATERIAL TEMPERATURE RATINGS:

PCTFE	-40 (-40) / 160 (71)	°F (°C)
PEEK®	-40 (-40) / 300 (148)	°F (°C)
EPDM	-30 (-34) / 250 (121)	°F (°C)
VITON®	-15 (-26) / 300 (148)	°F (°C)
LOW-TEMP NITRILE	-60 (-51) / 160 (71)	°F (°C)

Viton® is a registered trademark of E.I.duPont de Nemours and Company
SilcoNert® is a registered trademark of SilcoTek
PEEK® is a registered trademark of Victrex PLC
Contact factory for material certifications. Fees may apply.

STAINLESS STEEL SOFT SEAT
Shut Off Valves

SHUT OFF VALVES

VALVE WITHOUT PRESSURE RELIEF DEVICE

SERIES	1 2	-	3	4	-	5	6	7
70-00158		-			-			

1 2	BODY TYPE
FF	1/4" FNPT inlet 1/4" FNPT outlet 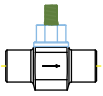 1
FM	1/4" FNPT inlet 1/4" MNPT outlet 1
MF	1/4" MNPT inlet 1/4" FNPT outlet 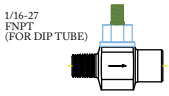
MM	1/4" MNPT inlet 1/4" MNPT outlet 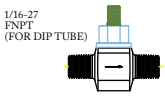
3	**O-RING MATERIAL** 2
E	EPDM
V	Viton®
N	Nitrile, lo-temp
4	**SEAT MATERIAL** 2
1	PCTFE
2	PEEK®

5	COATING
0	No coating
1	Silconert 200 (sulfinert®)
6	**HANDLE STYLE**
1	Knob
2	T-handle 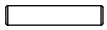
7	**LABEL/ PRESSURE MARKING**
2	Premier knob label with 3000 psig pressure marking 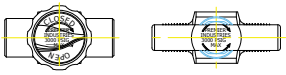

NOTE:

1. DIP TUBES ARE NOT COMPATIBLE WITH 'FF' OR 'FM' STYLE VALVES.
2. SEE MATERIAL TEMPERATURE RATINGS TABLE. BE SURE TO CONSIDER ALL VALVE MATERIALS

MATERIAL TEMPERATURE RATINGS:

PCTFE	-40 (-40) / 160 (71)	°F (°C)
PEEK®	-40 (-40) / 300 (148)	°F (°C)
EPDM	-30 (-34) / 250 (121)	°F (°C)
VITON®	-15 (-26) / 300 (148)	°F (°C)
LOW-TEMP NITRILE	-60 (-51) / 160 (71)	°F (°C)

Viton® is a registered trademark of E.I.duPont de Nemours and Company
SilcoNert® is a registered trademark of SilcoTek
PEEK® is a registered trademark of Victrex PLC
Contact factory for material certifications. Fees may apply.

MINIATURE, BRASS METAL SEAT

Shut Off Valves

SHUT OFF VALVES

PREMIER INDUSTRIES

1590 99th Ln NE,
Minneapolis, MN 55449
763-786-4020

MADE IN THE USA

Minneapolis, MN

DESCRIPTION

The Premier miniature shut-off valve, is part of a family of manual, high pressure, shut off valves. This valve features a metal seat *(SAE 360 Brass)*, 303 stainless steel valve stem, Cv of 0.25, compact size, and reliability at an economical cost.

Premier miniature shut-off valves may be used in a wide variety of applications as compatible with the materials of construction.

FEATURES

- Compact Size
- Metal to metal seal
- Maximum inlet pressure of 3000 PSI *(206.84 bar)*
- Cv of 0.25
- Economical pricing
- Machined bar stock brass bodies eliminate porosity found in castings

The Premier miniature shut off valves design is remarkably flexible.
Contact Premier Industries for a custom miniature shut off valve to meet your exact needs.

SHUT OFF VALVES

MINIATURE, BRASS METAL SEAT

Shut Off Valves

SPECIFICATIONS

- **MAXIMUM INLET PRESSURE :** 3000 PSIG *(206.84 bar)*
- **WEIGHT:** 0.3 lbs
- **LEAK RATE:** Bubble tight
- **FLOW (Cv):** 0.25

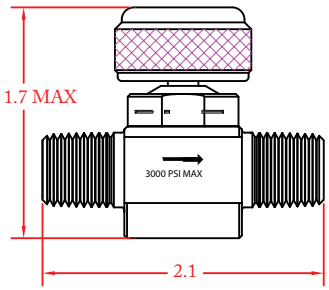

MATERIALS OF CONSTRUCTION

- **BODY**:
  - SAE 360 Brass
- **VALVE STEM**: 303 Stainless Steel
- **SEALS**: BUNA-N
- **HAND KNOB**: 6061-T6 Aluminum / black anodized

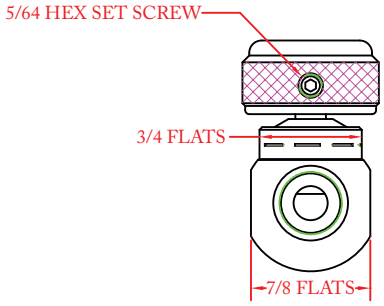

PORTING

- **INLET**:
  - 1/4-18 MNPT
- **OUTLET:**
  - 1/4-18 MNPT

(Part number shown above: 70-00223)

FLOW SIGHT TUBE

Shut Off Valves

SHUT OFF VALVES

PREMIER INDUSTRIES

1590 99th Ln NE,
Minneapolis, MN 55449
763-786-4020

MADE IN THE USA

Minneapolis, MN

DESCRIPTION

The Premier flow sight tube valves are made in the USA, complete with a needle style, flow control/shut off valve.

These valves are available with C10, CGA 600, and 1/8" FNPT inlet connections and are designed to function with a wide range of Premier transportable regulators. They can be used with a wide range of gases that are compatible with the materials of construction.

FEATURES

- 360 Brass Body
- Acrylic flow indicator
- 600 PSIG *(41.37 bar)* max inlet pressure
- Economical pricing

The Premier Flow Sight Tube Valve's design is remarkably flexible.
Contact Premier Industries for a custom Flow Sight Tube Valve to meet your exact needs.

SHUT OFF VALVES

FLOW SIGHT TUBE

Shut Off Valves

SPECIFICATIONS

- **MAXIMUM INLET PRESSURE :** 600 PSIG *(41.37 bar)*

MATERIALS OF CONSTRUCTION

- **BODY**:
  - SAE 360 Brass
- **FLOW INDICATOR**: Clear Acrylic
- **SEAL**: Viton®

PORTING

- **OUTLET:**
  - 1/8" Hose Barb
- **INLET:**
  - CGA 600 *(P/N: 50-10788)*
  - C10 *(P/N: 50-10807)*
  - 1/8" FNPT *(P/N: 50-10739)*

OPTIONS

- Inlet Porting
- Inlet Pressure

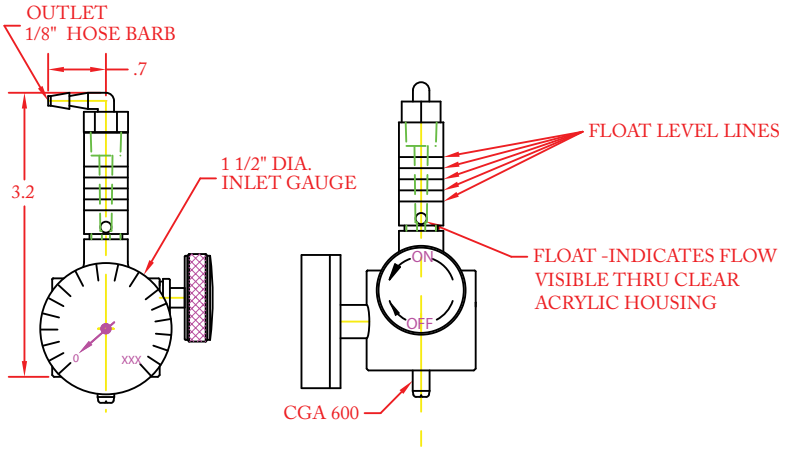

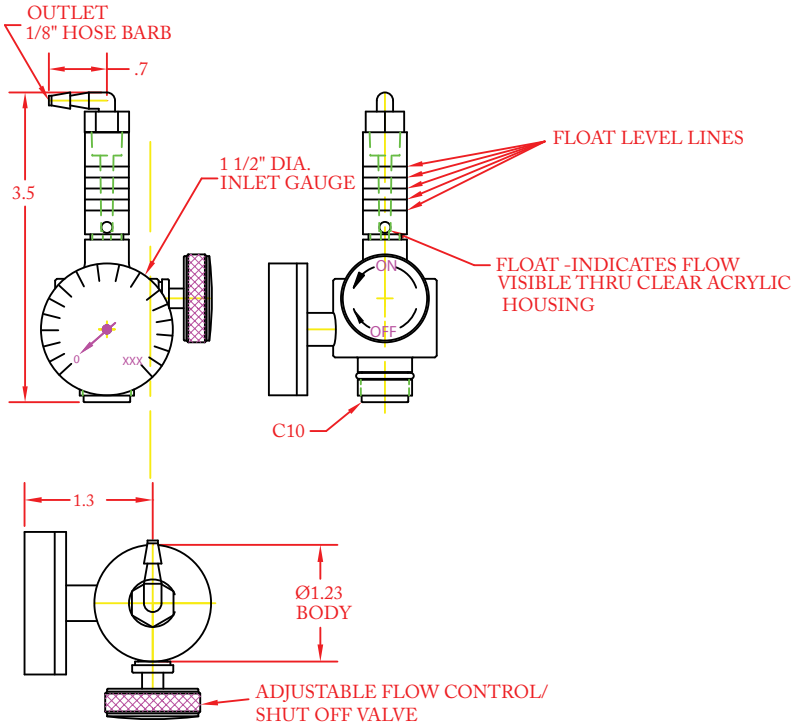

Viton® is a registered trademark of E.I.duPont de Nemours and Company
Contact factory for material certifications. Fees may apply.

HIGH PRESSURE ANGLE PATTERN

Shut Off Valves

70A SERIES

PREMIER INDUSTRIES

1590 99th Ln NE,
Minneapolis, MN 55449

763-786-4020

MADE IN THE USA

Minneapolis, MN

DESCRIPTION

Premier 70A Series shut off valves are stainless steel, high pressure valves rated for pressures up to 10000 PSIG; 70A Series valves support the flow of a liquid or gas in an angle configuration and feature a metal stop that prevents stem over-travel. The metal stop also functions as a secondary metal-to-metal seat should the soft seat fail.

Premier 70A valves may be used in a wide variety of applications consistent with valve materials compatibility with media. Common applications include gas analysis sampling systems, GSE support pressure panels, research and development labs, manifolds, panels, and instrumentation among others.

FEATURES

- Rated up to 10000 PSIG
- Angle configuration
- A variety of port sizes and configurations
- Low torque at high pressures
- Bubble-tight shutoff

The Premier 70A Series valve's design is remarkably flexible.
Contact Premier Industries for a custom 70A Series valve to meet your exact needs.

70A SERIES

HIGH PRESSURE ANGLE PATTERN

Shut Off Valves

SPECIFICATIONS

- **MAXIMUM OPERATING PRESSURE :**
  - PTFE seat, SAE 360 Brass body: 3500 PSIG / 241 BAR
  - PTFE seat, 316 Stainless Steel body: 3500 PSIG / 241 BAR
  - PCTFE seat, SAE 360 Brass body: 6000 PSIG / 414 BAR
  - PCTFE seat, 316 Stainless Steel body: 6000 PSIG / 414 BAR
  - PEEK® seat, SAE 360 Brass body: 6000 PSIG / 414 BAR
  - PEEK® seat, 316 Stainless Steel body: 10000 PSIG / 690 BAR
  - Vespel SP-1® seat, SAE 360 Brass body: 6000 PSIG / 414 BAR
  - Vespel SP-1® seat, 316 Stainless Steel body: 10000 PSIG / 690 BAR
- **LEAK RATE:** Bubble Tight

MATERIALS OF CONSTRUCTION

- **BODY**:
  - 316 Stainless Steel
  - SAE 360 Brass
- **VALVE SEAT**:
  - PTFE
  - PCTFE
  - PEEK®
  - Vespel SP-1®
- **VALVE STEM**:
  - 17-4 Stainless Steel (Hardened)
- **O-RING**:
  - BUNA-N
  - AFLAS®
  - Viton-A®
  - EPDM
  - Kalrez®
  - Nitrile, lo-temp
- **BACK-UP RING**:
  - PTFE
  - PCTFE
- **WETTED PARTS**:
  - 316 Stainless Steel
  - 17-4 Stainless Steel
  - Nitronic® 60 Stainless Steel
  - PEEK®

PORTING

- **INLET/OUTLET PORTING:**
  - 1/4" NPT, SAE J1926, MS 33649, Medium Pressure, NPTF

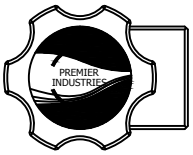

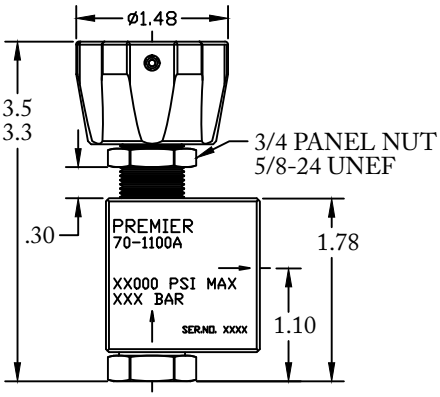

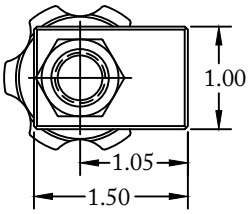

(Part number shown above: 70-1100A)

Kalrez®, Vespel®, and Viton® are registered trademarks of E.I.duPont de Nemours and Company.
PEEK® is a registered trademark of Victrex PLC
AFLAS® is a registered trademark of the Asahi Glass Co., Ltd.
Nitronic® is a registered trademark of AK Steel

HIGH PRESSURE ANGLE PATTERN

Shut Off Valves

70A SERIES

PART #	1	-	2	3	4	5	-	6 7
70-1100		-					-	

1	PATTERN
A	Angle pattern
2	**MATERIALS OF CONSTRUCTION**
B	SAE 360 Brass Body
S	316 Stainless Steel Body
3	**PORT SIZE**
4	1/4”
4	**PORT TYPE**
1	NPT
2	SAE J1926
3	MS 33649
4	MEDIUM PRESSURE
6	NPTF

5	SEAT MATERIAL
T	PTFE
C	PCTFE
P	PEEK®
V	VESPEL SP-1®
6 7	**O-RING MATERIAL**
00	BUNA-N
01	AFLAS®
02	VITON-A®
05	EPDM
11	KALREZ®
12	NITRILE, LO-TEMP

AFLAS® is a registered trademark of the Asahi Glass Co., Ltd.
PEEK® is a registered trademark of Victrex PLC
Kalrez®, Vespel® & Viton® are registered trademarks of E.I.duPont de Nemours and Company.

HIGH PRESSURE SHUT OFF WITH BLEED/VENT VALVE

70AB SERIES

PREMIER INDUSTRIES

1590 99th Ln NE,
Minneapolis, MN 55449
763-786-4020

MADE IN THE USA

Minneapolis, MN

DESCRIPTION

Premier 70AB Series shut off valves are stainless steel, high pressure shut off valves rated for pressures up to 10000 PSIG. 70AB Series valves feature a metal stop that prevents stem over-travel; the metal stop also functions as a secondary metal-to-metal seat should the soft seat fail. The bleed/vent valve enables users to bleed pressures downstream down to zero.

Premier 70AB valves may be used in a wide variety of applications consistent with valve materials compatibility with media. Commonly used in purge applications.

FEATURES

- Rated up to 10000 PSIG
- A variety of port sizes and configurations
- Low torque at high pressures
- Metal stop prevents stem-over-travel
- Can be used to bleed downstream pressure to 0

The Premier 70AB Series valve's design is remarkably flexible.
Contact Premier Industries for a custom 70AB Series valve to meet your exact needs.

70AB SERIES

HIGH PRESSURE SHUT OFF WITH BLEED/VENT VALVE

SPECIFICATIONS

- **MAXIMUM OPERATING PRESSURE :**
  - PTFE seat, SAE 360 Brass body: 3500 PSIG / 241 BAR
  - PTFE seat, 316 Stainless Steel body: 3500 PSIG / 241 BAR
  - PCTFE seat, SAE 360 Brass body: 6000 PSIG / 414 BAR
  - PCTFE seat, 316 Stainless Steel body: 6000 PSIG / 414 BAR
  - PEEK® seat, SAE 360 Brass body: 6000 PSIG / 414 BAR
  - PEEK® seat, 316 Stainless Steel body: 10000 PSIG / 690 BAR
  - Vespel SP-1® seat, SAE 360 Brass body: 6000 PSIG / 414 BAR
  - Vespel SP-1® seat, 316 Stainless Steel body: 10000 PSIG / 690 BAR
- **LEAK RATE:** Bubble Tight

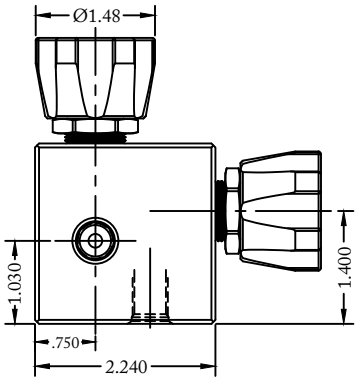

MATERIALS OF CONSTRUCTION

- **BODY**:
  - 316 Stainless Steel
  - SAE 360 Brass
- **VALVE SEAT**:
  - PTFE
  - PCTFE
  - PEEK®
  - Vespel SP-1®
- **VALVE STEM**:
  - 17-4 Stainless Steel (Hardened)
- **O-RING**:
  - BUNA-N
  - AFLAS®
  - Viton-A®
  - EPDM
  - Kalrez®
  - Nitrile, lo-temp
- **BACK-UP RING**:
  - PTFE
  - PCTFE
- **WETTED PARTS**:
  - 316 Stainless Steel
  - 17-4 Stainless Steel
  - Nitronic® 60 Stainless Steel
  - PEEK®

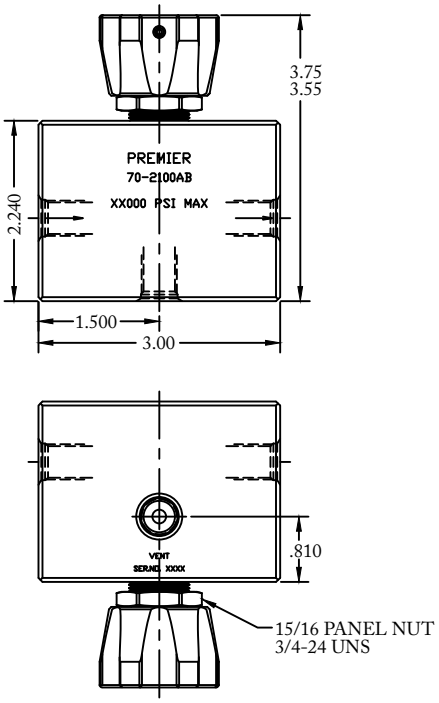

(Part number shown above: 70-2100AB)

PORTING

- **INLET/OUTLET PORTING**
  - 1/4" NPT, SAE J1926, MS 33649, NPTF
  - 1/2" NPT, SAE J1926, MS 33649, NPTF

Kalrez®, Vespel®, and Viton® are registered trademarks of E.I.duPont de Nemours and Company.
PEEK® is a registered trademark of Victrex PLC
AFLAS® is a registered trademark of the Asahi Glass Co., Ltd.
Nitronic® is a registered trademark of AK Steel

HIGH PRESSURE SHUT OFF WITH BLEED/VENT VALVE

70AB SERIES

PART #	-	1	2	3	4	-	5 6
70-2100AB	-					-	

1	MATERIALS OF CONSTRUCTION
B	SAE 360 Brass Body
S	316 Stainless Steel Body
2	**PORT SIZE**
4	1/4”
8	1/2”
3	**PORT TYPE**
1	NPT
2	SAE J1926
3	SAE AS5202 / MS33649
6	NPTF

4	SEAT MATERIAL
T	PTFE
C	PCTFE
P	PEEK®
V	VESPEL SP-1®
5 6	**O-RING MATERIAL**
00	BUNA-N
01	AFLAS®
02	VITON-A®
05	EPDM
11	KALREZ®
12	NITRILE, LO-TEMP

AFLAS® is a registered trademark of the Asahi Glass Co., Ltd.
PEEK® is a registered trademark of Victrex PLC
Kalrez®, Vespel® & Viton® are registered trademarks of E.I.duPont de Nemours and Company.

RELIEF VALVES

RELIEF VALVES

PREMIER INDUSTRIES

1590 99th Ln NE,
Minneapolis, MN 55449
763-786-4020

MADE IN THE USA

Minneapolis, MN

DESCRIPTION

Premier relief valves protect your system from overpressurization with reliable preset relief pressures between 500-1800 psig *(34.47-124.11 bar)*. Great for stand alone use or for use with a wide range of Premier regulators for optimum reliability. Premier relief valves are available in a variety of materials; they can be used with a wide range of media as compatible with their materials of construction.

FEATURES

- Captured outlet
- PCTFE seat
- Compatible with gas and hydraulic media
- Available in a variety of materials

The Premier relief valve design is remarkably flexible.
Contact Premier Industries for a custom relief valve to meet your exact needs.

RELIEF VALVES

RELIEF VALVES

SPECIFICATIONS

- **RELIEF PRESSURE :**
  - MAX: 1800 PSIG *(124.11 bar)*
  - MIN: 500 PSIG *(34.47 bar)*
- **OPERATING TEMPERATURE :**
  - -100 - 165˚F *(-73 - 73˚C)*

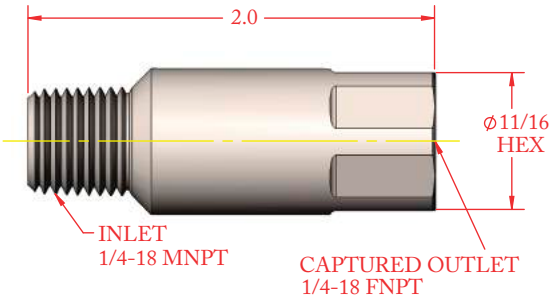

MATERIALS OF CONSTRUCTION

- **HOUSING MATERIALS:**
  - SAE 360 Brass / Nickel Plated
  - 6061-T6 Aluminum / Nickel Plated
  - 303 Stainless Steel
  - 316 Stainless Steel
- **SEAT:** PCTFE
- **SPRING:** 300 Series Stainless Steel
- **ADJUSTING SCREW:** 303 Stainless Steel
- **SEAT RETAINER:** 303 Stainless Steel

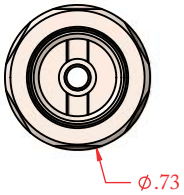

(Part Number 70-00288 shown above)

PORTING

- **INLET:** 1/4" MNPT
- **OUTLET:** 1/4" FNPT *(captured)*

RELIEF VALVES

RELIEF VALVES

SERIES	-	1	-	XXX
70-00288	-		-	

1	**HOUSING MATERIAL** *AND FINISH*
1	SAE 360 Brass, *Nickel Plated*
2	6061-T6 Aluminum, *Nickel Plated*
3	303 Stainless Steel, *Cleaned per procedure #515*
4	316 Stainless Steel, *Cleaned per procedure #515*
XXX	**FACTORY SET RELIEF PRESSURE** *IN PSIG / 10*

'XXX' Relief pressure in psig divided by 10.

Example: '055' = 550 psig relief pressure.
'120' = 1200 psig relief pressure.

Use all 3 digits.

PNEUMATICALLY ACTUATED THREE WAY, TWO POSITION
Valves

PA32 SERIES

PREMIER INDUSTRIES

1590 99th Ln NE,
Minneapolis, MN 55449

763-786-4020

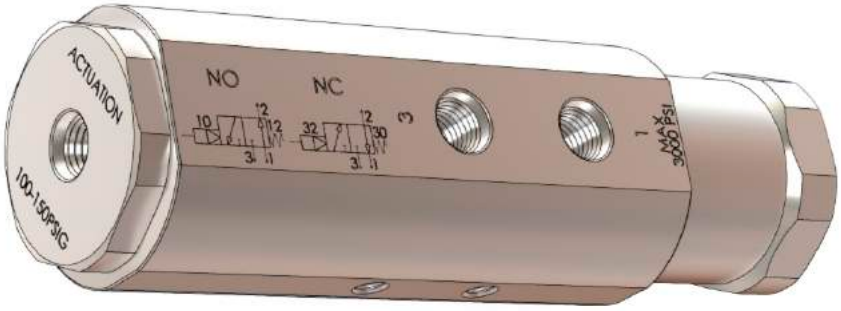

MADE IN THE USA

Minneapolis, MN

DESCRIPTION

The Premier PA32 Series pneumatically actuated, high pressure 3/2 valve can operate as both normally open and normally closed with a simple change in plumbing. This valve is rated for operating pressures up to 3000 psig /206.8 barg, Cv 0.025, and can actuate at as low as 100 psig / 6.89 barg.

NORMALLY OPEN

When used in the normally open position while unloaded, the PA32 allows flow from inlet to outlet. When loaded with 100-150 psig *(6.89-10.34 bar)*, the PA32 allows flow from outlet to exhaust.

NORMALLY CLOSED

When used in the normally closed position while unloaded it allows flow from outlet to exhaust. When loaded with 100-150 psig *(6.89-10.34 bar)*, the PA32 allows flow from inlet to outlet.

FEATURES

- High process pressures for heavy actuation loads.
- Can be used as normally open or normally closed

The Premier PA32 Series valve's design is remarkably flexible.
Contact Premier Industries for a custom PA32 Series valve to meet your exact needs.

PA32 SERIES

PNEUMATICALLY ACTUATED THREE WAY, TWO POSITION
Valves

SPECIFICATIONS

- **MAWP:** 3000 PSIG *(206.84 bar)*
- **ACTUATION PRESSURE :**
  - 100-150 PSIG *(6.89-10.34 bar)*
- **FLOW (Cv) :** 0.025

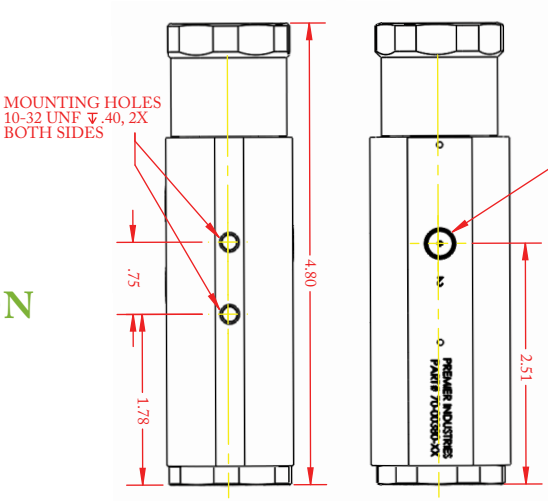

MATERIALS OF CONSTRUCTION

- **METALS**:
  - SAE 360 Brass, Nickel Plated & 17-4 Stainless Steel
  - 303 Stainless Steel & 17-4 Stainless Steel
- **SOFT GOODS**:
  - PTFE, BUNA-N, & POLYURETHANE
- **LUBRICANT**:
  - Krytox 240AC

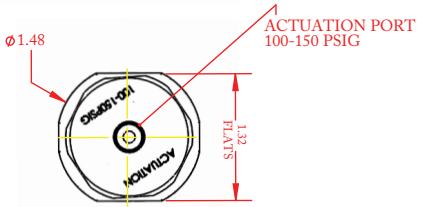

PORTING

- **SAE J1926-1 SIZE -2 (1/8 TUBE)** *(standard, see selector)*
  - **PORT '1':** INLET FOR NORMALLY OPEN OPERATION (VENT FOR N.C.)
  - **PORT '2':** PROCESS OUTLET PORT
  - **PORT '3':** INLET FOR NORMALLY CLOSED OPERATION (VENT FOR N.O.)

NORMALLY OPEN

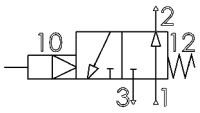

NORMALLY CLOSED

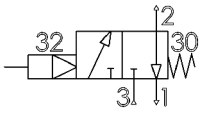

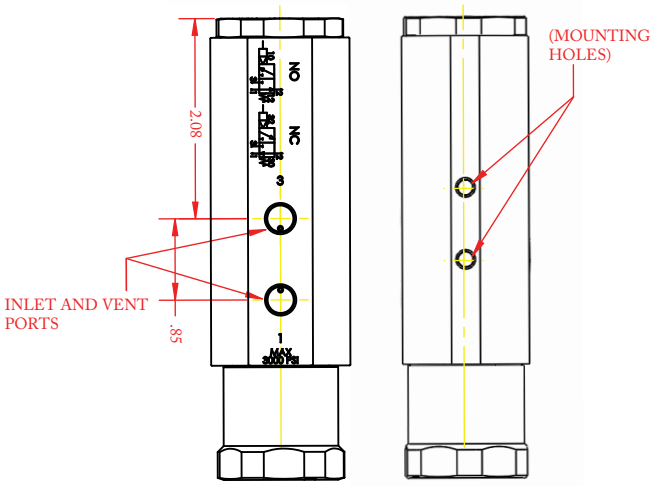

(Part number shown above: 70-00380)

OPTIONS

- Private labeling
- Bottom mount bracket: ABS plastic and stainless steel *(see page 3)*

PNEUMATICALLY ACTUATED THREE WAY, TWO POSITION

Valves

PART #	-	1	2	-	3
70-00380	-			-	

1	MATERIAL
1	SAE 360 Brass, Nickel Plated & 17-4 Stainless Steel
2	303 Stainless Steel & 17-4 Stainless Steel
2	**PORTING**
1	SAE J1926-1, SIZE -2 (1/8 TUBE)

MODIFICATIONS (ADD ALL REQUIRED MODS TO END OF PART#)	
BLANK	None
B	Bottom mount bracket
SPX5	Clean and handle to SPX class 5

BOTTOM MOUNT BRACKET
(OPTIONAL)

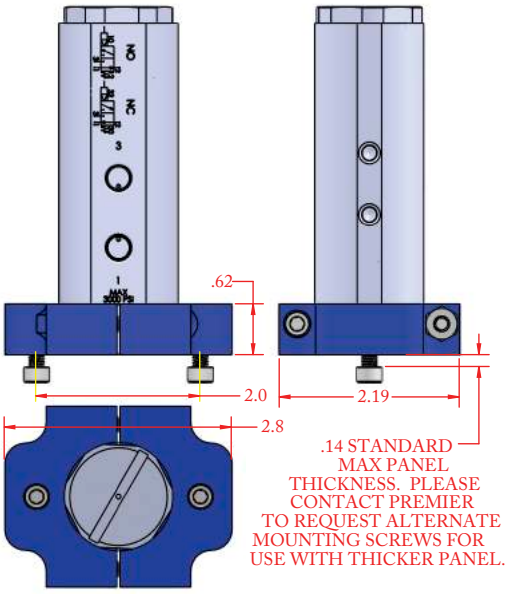

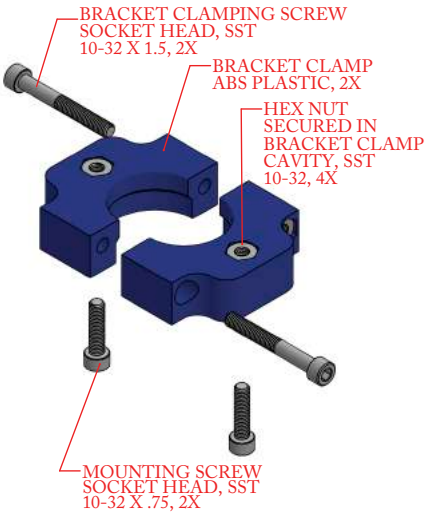

ACCESSORIES

Premier offers a variety of accessories for easy integration into your gas delivery system. Contact us for help choosing an accessory that meets the needs of your application. We would be happoy to answer any questions with regards to our standard line of Premier accessories.

ACCESSORIES

Sampling Cylinders *With integrated shut-off valves* **370**

Cylinder Holders *Heavy HPDE Base + Nylon Strap* **373**

Panel Mounting Brackets *Stainless steel or aluminum black anodized*. **374**

SAMPLING CYLINDERS

Integrated Shut Off Valves

SAMPLING CYLINDERS

PREMIER INDUSTRIES

1590 99th Ln NE,
Minneapolis, MN 55449
763-786-4020

MADE IN THE USA

Minneapolis, MN

DESCRIPTION

Premier Sampling Cylinders are designed to provide a safe and reliable solution for a variety of liquid and gas storage, transportation, sampling, and analysis needs. Common applications include: sampling for gas chromatography, hydrocarbon sampling in refineries/petrochemical plants, snubbers in reactive feed lines, and condensate sampling in fossil fuel and nuclear power plants.

Premier sampling cylinders feature seamless 316 stainless steel construction, allowing for consistant wall thickness/internal volume, and increased corrosion resistance and integrity. All cylinders have 1/4-18" NPT connections on each end, which integrate seamlessly with Premier's stainless steel inlet and outlet shut off valves (optional burst discs, and relief valves available).

FEATURES

- Seamless 316 stainless steel cylinders
- Consistant wall thickness and internal volume
- 316 stainless steel inlet and outlet valves
- Optional pressure relief devices
- Optional SilcoNert® coating
- Very competitive pricing
- Models are available for both corrosive and non-corrosive service
- Machined bar stock valve bodies eliminate porosity found in castings

The Premier Sampling Cylinder design is remarkably flexible.
Contact Premier Industries for a custom excess Sampling Cylinder to meet your exact needs.
SilcoNert® is a registered trademark of SilcoTek

SAMPLING CYLINDERS

SAMPLING CYLINDERS
Integrated Shut Off Valves

SPECIFICATIONS

- **MAXIMUM PRESSURE RATINGS:**
  - **Cylinders**: 1800 PSIG *(124.11 bar)*
  - **Shut-off valves:** 3000 PSIG *(206.84 bar)*
  - **Pressure relief device:** up to 1800 PSIG *(124.11 bar)*
    (see porting)

  ***Always configure pressure rating to the component with the lowest rating*
- **CYLINDER INTERNAL VOLUME:**
  - 50 cc, 150cc, 300cc, 500cc

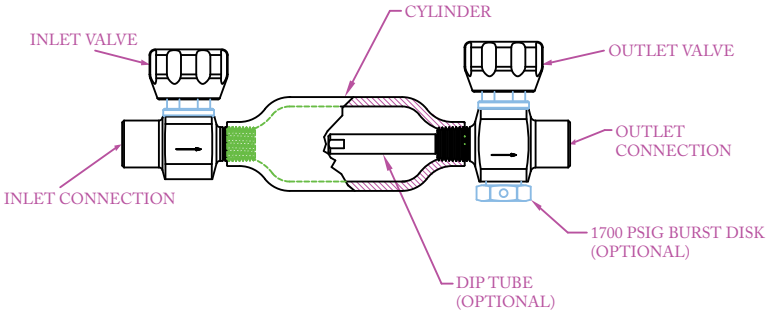

(Part number 70-00220-XX1242 shown above)

MATERIALS OF CONSTRUCTION

- **CYLINDER, VALVE BODIES & VALVE NUTS**:
  - 316 Stainless Steel
- **VALVE STEM:** 17-4 H900 Stainless Steel
- **BURST DISK:** 316L Stainless Steel
- **BURST DISK SEAL:**
  - PTFE coated 316 Stainless Steel
- **DIP TUBES:** 316 Stainless Steel
- **VALVE SEATS:** PCTFE
- **O-RINGS:** Viton® and EPDM
- **BACK-UP RING:** PTFE
- **NON-WETTED PARTS:**
  - 300 Series Stainless Steel
  - 6061-T6 Aluminum
- **OPTIONAL RELIEF VALVE:**
  - 316 Stainless Steel
- **RELIEF VALVE SEAT**: PCTFE

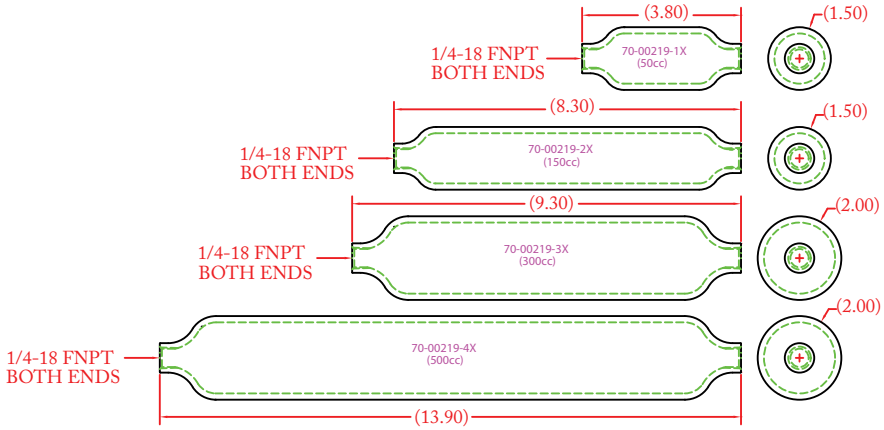

PORTING

- **OUTLET VALVE:**
  - 1/4" MNPT, *no burst disk*
  - 1/4" FNPT, *no burst disk*
  - 1/4" MNPT, *1700 PSIG (117.21 bar) burst disk*
  - 1/4" FNPT, *1700 PSIG (117.21 bar) burst disk*
  - 1/4" MNPT, *1800 PSIG (124.11 bar) relief valve*
  - 1/4" FNPT, *1800 PSIG (124.11 bar) relief valve*
- **INLET VALVE:**
  - 1/4" MNPT
  - 1/4" FNPT

OPTIONAL RELIEF VALVE

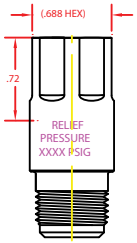

(Part number 70-00217 shown above)

OPTIONS

- 1700 PSIG (*117.21 bar)* burst disk
- Dip tube
- Relief valve
- Optional SilcoNert® coating
  (valves, cylinders, and pressure relief devices)

Viton® is a registered trademark of E.I.duPont de Nemours and Company
SilcoNert® is a registered trademark of SilcoTek

SAMPLING CYLINDERS

Integrated Shut Off Valves

SAMPLING CYLINDERS

PART #	-	1	2	3	4	5	6
70-00220	-						

1	METAL FINISHING
N	None
S	Silconert 2000®

2	O-RING MATERIAL
E	EPDM
V	Viton®

3	CYLINDER SIZE *& MANUFACTURER*
1	50 CC *(LUXFER)*
2	150 CC *(LUXFER)*
3	300 CC *(LUXFER)*
4	500 CC *(LUXFER)*
5	150 CC *(ISGAS)*

4	INLET VALVE
1	1/4" MNPT inlet connection
2	1/4" FNPT inlet connection

5	OUTLET VALVE
1	1/4" MNPT inlet connection *(no burst disc)*
2	1/4" FNPT inlet connection *(no burst disc)*
3	1/4" MNPT inlet connection *(1700 psig burst disc)*
4	1/4" FNPT inlet connection *(1700 psig burst disc)*
5	1/4" MNPT inlet connection *(1800 psig relief valve)*
6	1/4" FNPT inlet connection *(1800 psig relief valve)*

6	DIP TUBE
Blank	None
2	2.00"
3	3.75"

Viton® is a registered trademark of E.I.duPont de Nemours and Company
SilcoNert® is a registered trademark of SilcoTek
Contact factory for material certifications. Fees may apply.

CYLINDER HOLDERS

Heavy HPDE Base + Nylon Strap

CYLINDER HOLDER

PREMIER INDUSTRIES

1590 99th Ln NE,
Minneapolis, MN 55449
763-786-4020

MADE IN THE USA

Minneapolis, MN

PREMIER CYLINDER HOLDERS

Premier Adjustable Cylinder Holders provide a safe and stable place for the storage of your gas cylinders. Portable, safe, and reliable for gas cylinders from 2⅞" to 3½"

FEATURES

- Very competitive pricing
- 1" hook and loop, nylon cinching strap
- Heavy HPDE Base

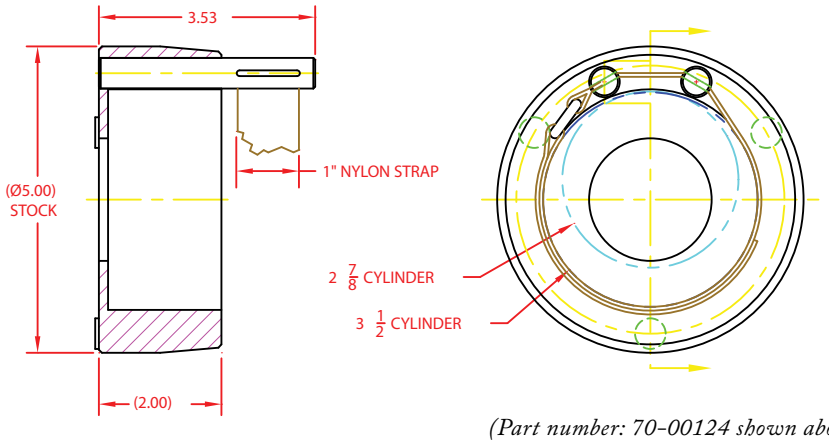

(Part number: 70-00124 shown above)

The designs for Premier cylinder accessories are remarkably flexible.
Contact Premier Industries for custom accessories to meet your exact needs.

PANEL MOUNTING BRACKETS

Stainless Steel/Aluminum Black Anodized

PANEL MOUNTING BRACKETS

PREMIER INDUSTRIES

1590 99th Ln NE,
Minneapolis, MN 55449
763-786-4020

MADE IN THE USA

Minneapolis, MN

DESCRIPTION

Premier Heavy Duty Panel Mounting Brackets secure tightly around the bodies of a variety of our high pressure series regulators to safely secure your regulator with two mounting holes. We have two designs available, one for all 2.12 diameter bodies, andone for our larger 2.505 diameter bodies.

FEATURES

- 303 Stainless Steel and 6061-T6 Aluminum black anodized models available

P/N 30-10500: 2.505 DIAMETER BODIES

Premier 3025 Series
Premier 3025ALSeries
Premier 6025 Series
Premier 6025AL Series

P/N 30-10059: 2.12 DIAMETER BODIES

Premier 3000 Series
Premier 3000ALSeries
Premier 3016 Series
Premier 3020 Series
Premier 3023 Series
Premier 3023AL Series
Premier 3100 Series
Premier 3100AL Series
Premier 3123 Series
Premier 3123AL Series
Premier 6000 Series
Premier 6000AL Series
Premier 6016 Series
Premier 6023 Series
Premier 6023AL Series
Premier 6100 Series
Premier 6100AL Series
Premier 6123 Series

The Premier panel mounting bracket's design is remarkably flexible.
Contact Premier Industries for a custom panel mounting bracket to meet your exact needs.

sales@premierind.us

763.786.4020

WWW.PREMIERIND.US

PREMIER INDUSTRIES